Section 15

Infrastructure Works - Rules 1 to 26

Applicability

VIC

Publication Requirement

External Only

Document Status

Issue/Revision #	Effective from
4.0	27 January 2013
5.0	04 October 2015
5.1	01 July 2018
5.2	05 July 2020

© Australian Rail Track Corporation Limited (ARTC)

Disclaimer

This document is uncontrolled when printed.

Authorised users of this document should visit ARTC's website (www.artc.com.au) to access the latest version of this document.

Table of Contents

1. Definitions 15-7
a. The Red Signal 15-7
b. The Yellow Signal 15-7
c. The Green Signal 15-7
d. The Green Signal 15-7
e. A.T.W.S 15-7
f. Fixed Signals 15-7
2. Activity of Trolleys 15-7
a. Responsibility of Workers Employees 15-7
b. Responsibility of Workers Employees in Charge 15-8
c. Flagman 15-8
3. Track Force Protection - Country Regions 15-8
a. Occasions when Protection must be Provided 15-8
b. How Protection is Provided 15-9
c. Approaching Train 15-9
d. Reduced Speed 15-9
e. Restricted Terrain 15-10
f. Special Case of a Tunnel 15-10
g. Signalbox with a Signaller on Duty 15-10
h. Obstruction within 500 metres in Advance of the Home Signal 15-10
i. Automatic Signalling 15-11
j. Responsibilities of Track Force Protection Coordinator Ganger 15-11
k. In shunting yards and terminals 15-12
l. Protecting by setting signals at STOP 15-13
4. Track Force Protection - Suburban Area 15-16
a. Clearly Defined Suburban Area 15-16
b. Occasions when Protection must be Provided 15-16
c. How Protection is Provided 15-16
d. Responsibilities of Ganger 15-17
e. Approaching Train 15-17
f. Reduced Speed 15-17
g. Restricted Terrain 15-17
h. Special Case of a Tunnel 15-18

i. Signalbox with a Signaller on Duty 15-18
j. Obstruction within 400 metres in Advance of the Home Signal 15-18
k. Automatic Signalling 15-18
5. Obstruction of the Line Special Circumstance 15-19
6. Track Force Protection - Inner Suburban Area Only 15-19
a. Clearly Defined Inner Suburban Area 15-19
b. Additional Procedure 15-19
c. Vehicle Crossing the Running Lines 15-19
d. Rail Removal and Relaying Operations in Track Circuited Areas 15-20
e. Actions of Employees at Fixed Signals 15-21
7. Reflective Signs During Prolonged Periods of Reduced Speeds 15-22
a. Reflective Warning Sign 15-22
b. Reflective Caution Sign 15-23
c. Reflective 'NS' Sign 15-23
d. Reflective ‘N’ Sign 15-23
e. Compliance of Signs 15-23
f. Locomotives Provided with Distance Counters 15-23
8. ‘Absolute Occupation’ of a Running Line 15-26
a. Requirement of ‘Absolute Occupation’ 15-26
b. Application for ‘Absolute Occupation’ 15-27
c. Signatures on Diagram of the Area 15-27
d. Prior to Occupation 15-27
e. Area Controlled by Signaller, Metrol 15-28
f. Special Train 15-28
g. Entry of Special Train to Area of ‘Absolute Occupation’ 15-29
h. Electric Staff or Train Staff and Ticket System 15-29
i. Signalbox or Signalling Complex 15-29
j. On-track Maintenance Machines 15-30
k. Single Line Working 15-30
9. Protection of an Area Under `Absolute Occupation' 15-30
10. Employees Worker on the Infrastructure Department 15-31
a. Ballast Trains 15-31
b. Overhead Electrical Connections 15-31
c. Disarranged/Disconnected Overhead Structures 15-31
d. Special Telephones 15-31

11. Duties of Site Supervisor Gangers 15-32
12. Inclement Weather and Natural Disasters 15-33
a. Safety of the Way or Works 15-33
b. Ganger's Site Supervisor's Reports 15-33
c. Action in Case of Fire 15-33
13. Removal of Livestock 15-33
14. Maintaining a Clear Line 15-34
15. Actions by Employees Workers on the Approach of a Train 15-34
a. Movement of Ballast Train 15-35
b. Employees Workers Working in Tunnel 15-35
c. Action by Drivers 15-35
d. Unusual Occurrences on Approaching Train 15-35
16. Securing the Permanent Way 15-36
17. Reduction in Train Speed Due to Track Works 15-36
a. 15-36
b. Positioning of Flagmen 15-36
c. Inclement Weather 15-36
d. Flagman Arrives at Signal Box 15-36
e. Returning to Normal Speed 15-37
f. Hand Signals to be Exhibited Clearly 15-37
18. Absolute Occupation of a Running Line 15-37
a. Driver of Special Train to Read Absolute Occupation Form Order 15-37
b. Protection of an area under Absolute Occupation 15-37
c. Double Lines - Train/Track Machine leaving the area of Occupation in the wrong direction 15-38
d. Series of Absolute Occupations Issued 15-38
19. Absolute Occupation/Power Off Conditions Protection of Work Sites 15-38
a. Definitions: 15-39
b. Obtaining Permission to Secure Points for Line Protection 15-39
c. Distribution of Agreed Protection 15-41
d. Applying to Signaller for Absolute Occupation 15-41
e. Entry/Exit of Train to Work Site 15-42
f. Cancellation of Absolute Occupation 15-44
g. Preventing Entry of Electric Trains into a Portion of Line where Overhead Traction Power is Switched Off 15-44

20. Absolute Occupation / Local Possession Authority - Multiple Work Groups 15-44

a. Definitions 15-44

b. Permit to Foul the Line 15-45

c. Protecting the Limits of a Permit to Foul the Line within an Absolute Occupation 15-48

21. Track Warrant Working 15-55

a. General Conditions 15-55

b. Issue of a Track Warrant 15-59

c. Extent of Track Warrant Boundaries 15-64

(i.) Train Order Territory 15-64

(ii.) Electric Staff, Automatic Electric Staff, Intermediate Electric Staff and Train Staff and Ticket Systems 15-65

(iii.) Automatic and Track Control System 15-65

(iv.) Automatic Block Signalling System 15-65

(v.) Section Authority System 15-66

(vi.) Centralised Traffic Control System 15-67

d. Lines Worked Under Token Systems 15-67

e. Automatic Electric Staff System 15-68

f. Locations Provided with Switching Facilities 15-68

g. Attendance of Signalling Staff 15-69

h. Corridors on Which Track Warrants are Authorised for Use 15-70

22. Booking Out' Procedures for Track 15-71

a. Main Running Line 15-71

(i.) Main Running Line 15-71

(ii.) Details to be Submitted to the Train Network Controller 15-71

b. Siding 15-72

(i.) Siding 15-72

(ii.) Details to be Submitted to the Signaller / Train Network Controller 15-72

c. Protection 15-73

(i.) Protection of Main Running Line 15-73

(ii.) Protection of a Siding 15-73

d. Persons Qualified to `Book Out' Track 15-73

e. Locations Provided with Voice Recording Facilities 15-74

f. Track `Booked Out' of Service for Extended Period 15-74

23. Infrastructure Booking Advice (IBA) 15-74
a. Purpose 15-74
b. Advertising Infrastructure Work 15-74
c. Compiling Infrastructure Booking Advices 15-75
d. Securing Infrastructure 15-75
e. Certifying Infrastructure 15-75
f. Booking Infrastructure back into use 15-76
g. Using uncommissioned infrastructure 15-76
h. Related References 15-76
24. Lookout Working 15-77
a. Purpose 15-77
b. General 15-77
(i.) Safety Assessment 15-77
(ii.) Restrictions 15-77
(iii.) Tools 15-78
c. Safety Measures 15-78
(i.) Safe Places 15-78
d. Track Force Protection Coordinator 15-78
(i.) Placing Lookouts 15-79
e. Lookouts 15-80
f. Communications with Network Controller 15-80
g. Keeping Records 15-81
h. Ending Lookout Working 15-81
i. Related References 15-81
25. Absolute Signal Blocking 15-82
a. Purpose 15-82
b. General 15-82
(i.) Safety Assessment 15-82
(ii.) Working under Absolute Signal Blocking 15-82
c. Using Absolute Signal Blocking 15-82
(i.) Restrictions 15-83
d. Requesting Absolute Signal Blocking 15-83
e. Permission for Absolute Signal Blocking 15-84
(i.) Area of Control 15-84

f. Protection Methods 15-84
(i.) Protecting Work 15-84
(ii.) Network Controller 15-85
g. Track Force Protection Coordinator 15-85
(i.) Confirming Protection is Applied 15-85
(ii.) Primary Duty 15-86
(iii.) Other duties 15-86
h. Ending Absolute Signal Blocking 15-86
(i.) Track Force Protection Coordinator 15-86
(ii.) Network Controller 15-86
i. Keeping Records 15-87
j. Related References 15-87

1. Definitions

a. The Red Signal

Indicates 'Stop'. Must be used when required to stop a train.

b. The Yellow Signal

Indicates 'Warning'. Must be used when prescribed for in this Code of Practice.

c. The Green Signal

Indicates 'Caution', (when waved slowly from side to side by a Flagman).
When displayed:

1. trains must reduce speed to 25km/h, or
2. other speed as prescribed.

d. The Green Signal

Indicates 'All Clear' when held steadily in the hand.

e. A.T.W.S

Audible Track Warning Signal.

f. Fixed Signals

Must not be used by Track Force Protection Coordinator Foremen, Flagman and other workers employees, except in cases of emergency or as provided for in this Code of Practice. Own hand signals should be used.

2. Activity of Trolleys

a. Responsibility of Workers Employees

Only the worker employee in charge, may place a trolley on the line, and is responsible for it and its use.

Trolleys must:

1. not be attached to a train,
2. be taken off the rails when not in use,
3. be placed well clear of the line and road approaches, and
4. have the wheels secured with a chain and padlock.

b. Responsibility of Workers Employees in Charge

Before leaving or passing any station or other place where there are fixed signals, or fouling any junction the worker employee in charge of a trolley must advise the Signaller or Train Network Controller on duty of the following:

1. destination of the trolley, and
2. the work it is going to do.

The worker employee must not proceed until:

1. the Signaller's or Train Network Controllers permission has been obtained, and
2. information on the movement of trains has been obtained.

When a trolley is used on a double line, it must proceed in the same direction as the trains.

c. Flagman

Whenever a trolley conveying material is placed on the running line a flagman must protect the trolley in accordance with these rules as follows:

1. on double lines, the flagman must follow the trolley and provide protection, and
2. protection must be provided in both directions on a single line.

3. Track Force Protection - Country Regions

a. Occasions when Protection must be Provided

Protection must be provided prior to:

1. any on-track machine carrying work persons and/or material,
2. any other obstruction being placed upon a running line,
3. any ballast or other maintenance train remaining stationary or moving slowly along the line,
4. any rail being taken out or relaying operations commencing, or
5. the line being unsafe due to landslip or other such cause.

b. How Protection is Provided

Protection must be provided as follows:

1. an outer flagman must place three Audible Track Warners (ATWs) on the line, 10 metres apart, not less than 2500 metres and not more than 4000 metres beyond the inner flagman obstruction. The 'Warning' hand signal (yellow flag or light) must be plainly exhibited to any approaching train even if a train is not expected,
2. an inner flagman must plainly exhibit the 'Stop' hand signal (red flag or light) not less than 500 metres from the obstruction,
3. this protection can only be withdrawn when instructions are received from the person in charge that the obstruction has been removed. The inner flagman then must plainly exhibit a green flag or light, held steadily in the hand, to the Driver of the train or light locomotive.

c. Approaching Train

The Driver of an approaching train must reduce speed on observing the 'Warning' hand signal or exploding ATWs. The driver must be prepared to stop the train and await further guidance from the inner flagman.

d. Reduced Speed

When the train or light locomotive is required to reduce speed:

1. the person Track Force Protection Coordinator in charge must instruct the inner flagman to exhibit the 'Caution' hand signal,
2. the Inner Flagman must stop the train for speeds required of less than 25 km/h. The Driver must be verbally informed of the speed at which the train can proceed and then display the 'Caution' hand signal,
3. when the train is clear of the work point, the inner flagman must exhibit a steady green flag or light and normal speed may be resumed.

e. Restricted Terrain

Should restricted terrain not allow a good and distant view of the 'Warning' hand signal, then the hand signal and three ATWs must be placed so that there is a good and distant view.
Restricted terrain includes:

1. within a tunnel,
2. close to the mouth of a tunnel nearest to obstruction,
3. steep descending gradient, and
4. curvature of the line.

f. Special Case of a Tunnel

In the case of a tunnel the outer flagman must:

1. place three ATWs 10 metres apart at the end of the tunnel nearest to the obstruction,
2. proceed through the tunnel to a position where the Driver can obtain a good and distant view of the 'Warning' hand signal, and
3. place on one rail three ATWs 10 metres apart at this position.

g. Signalbox with a Signaller on Duty

Should a signalbox be located within 2500 metres of an obstruction, and except as provided in para Rule 8 (e) above, the outer flagman must act as follows:

1. remain at the signalbox or signalling complex,
2. place three ATWs ten metres apart and display the 'Warning' hand signal,
3. instruct the Signaller to keep the fixed signals at the 'Stop' position, and
4. not allow any train to pass the signalbox until the obstruction has been removed.

h. Obstruction within 500 metres in Advance of the Home Signal

Where an obstruction is located within 500 metres in advance of the home signal, the outer flagman must:

1. instruct the Signaller to keep the fixed signals at the 'Stop' position, and
2. go back the required distance of 2500 metres, unless there is a signalbox within that distance when the flagman will stop at the signalbox, and act as directed above.

i. Automatic Signalling

Where automatic signalling is in force, the flagman need not go beyond the third fixed signal in the rear of the obstruction if within the 2500 metres, but must:

1. fix three ATWs on the line adjacent to the third signal beyond the obstruction, and
2. exhibit the 'Warning' hand signal until otherwise directed.

j. Responsibilities of Track Force Protection Coordinator Ganger

The Ganger, or person Track Force Protection Coordinator in charge, is personally responsible for ensuring that flagmen are:

1. positioned correctly, and
2. certified as competent.

The Ganger Track Force Protection Coordinator must also ensure that:

1. additional Flagmen are employed where a Driver's view is restricted,
2. an additional rail is available to replace a rail which has been removed, and
3. work is not carried out during inclement weather or when a clear view of the hand signal my not be obtained.

k. In shunting yards and terminals

1. Attended shunting yards and terminals

If rail traffic needs to be excluded from a work area within a shunting yard or terminal, the Track Force Protection Coordinator must get permission from the person in charge of the attended yard or terminal.

The Track Force Protection Coordinator must make arrangements with the person in charge of the yard to prevent unauthorised rail traffic entry into the work area.

The person in charge of the yard or terminal must ensure unauthorised rail traffic entry into the work area is prevented.

2. Unattended shunting yards and terminals

Where there is not a person in charge of the yard or terminal, the Track Force Protection Coordinator must make arrangements with:

- the Network Controller,

  or

- the person responsible for giving entry into the unattended shunting yard or terminal.

The Track Force Protection Coordinator must tell affected workers about the protection arrangements.

I. Protecting by setting signals at STOP

A worksite may be protected by setting signals at STOP on the approach side of the worksite.

Flagmen must be placed at each signal that is:

- used to protect worksites,

  or

- affected by work on track.

Automatic (permissive) signals must be kept at STOP for the duration of the work.

At locations where *controlled absolute signals* are available these signals must be used to protect the worksite when using Track Force Protection.

Controlled absolute signals must be:

- set and kept at STOP with blocking facilities / blocking commands applied,

  and

- cleared only if it is safe to allow rail traffic to pass through the worksite.

To use signals to protect worksites, Track Force Protection Coordinators must use one of the following methods.

1. If there are two controlled absolute signals within 500m of the worksite, an inner flagman must be placed at the first signal reached by approaching rail traffic.

   An outer flagman is not necessary.

2. If a signal between 500m and 1000m from the worksite in the direction of approaching rail traffic can be set at STOP, an inner flagman must be placed at that signal.

   An outer flagman is not necessary.

3. If there are no signals within 1000m of a worksite in the direction of approaching rail traffic:

   - an inner flagman must be placed between 500m and 1000m from the worksite,

     and

   - an outer flagman must be placed at a signal that can be set at STOP, within a further 2500m from the inner flagman.

The distance between the outer and inner flagmen must not be greater than 2500m.

If the distance between the outer and inner flagmen is less than 2500m, the outer flagman must warn rail traffic crews about the reduced distance to the inner flagman.

Affected Signals

If signals display STOP because they are affected by work on track, the Track Force Protection Coordinator:

- must tell Network Controller about the affected signals before starting work,

  and

- place flagmen at the affected signals.

Once rail traffic has stopped at an affected permissive automatic signal, flagmen must follow the Track Force Protection Coordinator's instructions about allowing rail traffic to proceed, and at what speed.

The Track Force Protection Coordinator must direct flagmen at affected controlled absolute signals to get the Network Controller to issue an authority to the rail traffic crew to pass the signal at STOP.

Absolute and Permissive signal areas

The Track Force Protection Coordinator must place a clearance flagman at the first running signal beyond the worksite that can show STOP if:

- a fixed signal is held at STOP to protect the worksite,

  and

- the Track Force Protection Coordinator cannot be sure that the line is clear of rail traffic as far as the first running signal that can display STOP, beyond the worksite in the direction of travel.

The clearance flagman must tell the Track Force Protection Coordinator when the line is clear for rail traffic to approach the signal.

Approaching worksites

Before authorising the inner flagman to allow rail traffic to approach worksites, Track Force Protection Coordinators must make sure that:

- workers are in safe places,

  and

- the track is unobstructed and safe for the passage of rail traffic.

Only Track Force Protection Coordinators may tell flagmen whether to allow rail traffic to proceed, and at what speed.

The Track Force Protection Coordinator must direct flagmen at controlled absolute signals to:

- ask the Network Controller to clear the signal,

  or

- get the Network Controller to issue an authority to rail traffic crew to pass the signal at STOP.

Flagmen at permissive automatic signals must allow rail traffic to pass only if the Track Force Protection Coordinator directs them to do so.

Rail traffic clearing worksite

Rail traffic crews must be advised when clear of worksites and that normal speed may be resumed by:

- verbal communication from the Track Force Protection Coordinator,

  or

- a CLEARANCE sign or flagman placed at least 50m beyond the worksite.

Single line crossing locations

If adjacent signals on converging lines at a single line crossing location are used to protect a worksite, a single flagman may be used to place protection and to allow rail traffic to pass either signal.

Terminal lines

If the Network Controller tells the Track Force Protection Coordinator that there is no current or planned rail traffic movement between the worksite and the end of a terminal line, protection from that direction is not necessary.

Related References

Section 30 Operating Procedures Infrastructure Works Procedure 35 Using Track Force Protection by setting signals at STOP.

4. Track Force Protection - Suburban Area

a. Clearly Defined Suburban Area

Is the area embraced by Lilydale, Belgrave, Alamein, Glen Waverley, from up home signals of the Eastern and South Eastern lines at Dandenong, from up home signals at:

1. Frankston, Sandringham, Williamstown,
2. Laverton Crossing Loop via Westona (but not the east and west lines between Altona Junction and Laverton),
3. St. Albans, and
4. Broadmeadows (via Essendon), Upfield, Epping, Hurstbridge, and the up end of Richmond, Jolimont (MCG) and North Melbourne.

b. Occasions when Protection must be Provided

Protection must be provided prior to:

1. any on-track machine carrying work persons and/or material,
2. any other obstruction being placed upon a running line,
3. any ballast or other maintenance train remaining stationary or moving slowly along the line,
4. any rail being taken out or relaying operations commencing, or
5. the line being unsafe due to landslip or other such cause.

c. How Protection is Provided

1. An outer flagman must place three Audible Track Warners (ATWs) on the line, 10 metres apart, not less than 1200 metres from the obstruction. The 'Warning' hand signal (yellow flag or light) must be plainly exhibited to any approaching train.
2. An inner flagman must plainly exhibit the 'Stop' hand signal (red flag or light) not less than 200 metres from the obstruction.
3. This protection can only be withdrawn when instructions are received from the person in charge that the obstruction has been removed. The inner flagman then must plainly exhibit a green flag or light, held steadily in the hand, to the Driver of the train or light locomotive.

d. Responsibilities of Ganger

The Ganger, or person in charge, is personally responsible for ensuring that flagman are:

1. positioned correctly, and
2. certified as competent.

The Ganger must also ensure that:

1. additional flagmen are employed where a Driver's view is restricted, and
2. an additional rail is available to replace a rail which has been removed.

e. Approaching Train

The Driver of an approaching train must reduce speed on observing the 'Warning' hand signal or exploding ATWs. The Driver must be prepared to stop the train and await further guidance from the inner flagman.

f. Reduced Speed

When the train or light locomotive is required to reduce speed:

1. the person in charge must instruct the inner flagman to exhibit the 'Caution' hand signal,
2. the Inner Flagman must stop the train for speeds of less than 25 km/h. Verbally inform the Driver of the speed at which the train can proceed. The inner flagman must then display the 'Caution' hand signal,
3. when the train is clear the inner flagman must exhibit a steady green flag or light and normal speed may be resumed, and
4. the speed of the train must not be increased until the steady green flag or light is exhibited.

g. Restricted Terrain

Should restricted terrain not allow a good and distant view of the 'Warning' hand signal, then the hand signal and three ATWs must be placed so that there is a good and distant view (at least 1200 metres). Restricted terrain includes:

1. within a tunnel,
2. close to the mouth of a tunnel nearest to obstruction,
3. steep descending gradient, and
4. curvature of the line.

h. Special Case of a Tunnel

In the case of a tunnel the outer flagman must:

1. place three ATWs 10 metres apart at the end of the tunnel nearest to the obstruction,
2. proceed through the tunnel to a position where the Driver can obtain a good and distant view of the 'Warning' hand signal, and
3. place on one rail three ATWs 10 metres apart at this position.

i. Signalbox with a Signaller on Duty

Should a signalbox be located within 1200 metres of an obstruction, and except as provided in para (e) above, the outer flagman must act as follows:

1. remain at the signalbox or signalling complex,
2. place three ATWs ten metres apart and display the 'Warning' hand signal,
3. instruct the Signaller to keep the fixed signals at the 'Stop' position, and
4. not allow any train to pass the signalbox until the obstruction has been removed.

j. Obstruction within 400 metres in Advance of the Home Signal

Where an obstruction is located within 400 metres in advance of a signalbox, the outer flagman must act as follows:

1. instruct the Signaller to keep the fixed signals at the 'Stop' position, and
2. go back the required distance of 1200 metres, unless there is a signalbox within that distance when the flagman will stop at the signalbox, and act as directed above.

k. Automatic Signalling

Except in the Clearly Defined Inner Suburban Area, where automatic signalling is in force, the flagman need not go beyond the third fixed signal in the rear of the obstruction if within the 1200 metres, but must:

1. fix three ATWs on the line adjacent to the third signal beyond the obstruction, and
2. exhibit the 'Warning' hand signal until otherwise directed.

5. Obstruction of the Line Special Circumstance

If it is necessary to obstruct the line between the up and down distant signals, verbal permission must be obtained from the Signaller. The Signaller must keep the relevant fixed signals at the 'Stop' position until the Ganger Track Force Protection Coordinator in charge advises the Signaller that the line is clear for the passage of trains.

This Rule also applies at a terminal station when the line inside the distant signal is to be obstructed, or inside the home signal where a distant signal is not provided.

The Ganger Track Force Protection Coordinator in charge must arrange for the obstruction to be protected.

6. Track Force Protection - Inner Suburban Area Only

a. Clearly Defined Inner Suburban Area

This means the area embraced by the up end of:

1. Richmond
2. North Melbourne, and
3. Jolimont (MCG)

It includes the Spencer Street passenger terminal, but not the up and down main goods lines between Spencer Street and South Kensington. The 'up' end means the end closest to Melbourne.

b. Additional Procedure

Before any impediment is placed on the running line in accordance with para 4(c) above, the following procedure is adopted:

1. the outer flagman must display the 'Warning' hand signal (yellow flag or light) at the second fixed signal from the obstruction, and
2. the inner flagman must plainly exhibit the 'Stop' hand signal (red flag or light) not less than 100 metres from the obstruction.

c. Vehicle Crossing the Running Lines

Where a vehicle is to cross the running lines to reach a work point the person in charge must:

1. comply with clause (b) above,
2. obtain the Signaller's permission to obstruct the running line, and

3. when permission has been granted the Signaller must be informed that the road/rail vehicle has reached the line on which the work is to be performed.

The Signaller must:

1. ensure that the applicable fixed signals are placed at the `Stop' position, when permission is granted, and
2. maintain the fixed signals at the 'Stop' position until advised by the person in charge that the line is clear.

d. Rail Removal and Relaying Operations in Track Circuited Areas

Prior to the removal of a rail, or relaying operations are commenced where track circuiting is in use, the Road Foreman or Ganger and Signal Supervisor must work closely together.

The Road Foreman or Ganger must:

1. make all necessary arrangements with the Signal Supervisor for all fixed signals controlling the entrance to the affected section to be secured in the 'Stop' position,
2. send out flagmen to act as prescribed,
3. commence work only when the Signal Supervisor has advised in writing that the fixed signals have been secured, in the 'Stop' position, and
4. furnish a certificate when permanent way operations have been completed.

The Signal Supervisor must:

1. place all applicable fixed signals at the 'Stop' position,
2. maintain signals in the 'Stop' position until the line is repaired,
3. state in writing that the signals have been secured, and
4. furnish a certificate that the signals are again in proper working order.

NOTE:

The above procedure does not apply in cases of a broken rail or other unsafe material.

In the case of home and starting signals the Signaller must be informed. Particulars must be entered in the Train Register Book.

e. Actions of Employees at Fixed Signals

After the road is made good and before the signals are restored to working order employees must act as prescribed hereunder.

At automatic signals the flagman must:

1. bring every train to a stand at the signal,
2. inform the Driver that the signal is out of service,
3. direct the Driver to proceed cautiously with the train through the section to the next signal ahead being prepared to stop at any obstruction, and
4. exhibit a green hand signal to the Driver.

At home signals the Hand Signaller must:

1. ascertain from the Signaller what train is to be brought forward,
2. inform the Signaller of the position of facing points, being approached by a train,
3. ensure that the facing points are set and secured for the line required, and
4. ensure that trailing points are in the proper position for the train to pass.

NOTE:

Where the home signals govern facing or trailing points or the fouling points of a crossover, a Caution Order must be issued by the Signaller, and given to the Driver as authority for the train to pass the defective home signal.

The train must not proceed unless the Driver understands the instructions of the Caution Order. The train or locomotive must be kept under strict control.

At starting signals the Hand Signaller must:

1. exhibit a red hand signal to stop each train at the signal, and
2. inform the Driver that the signal is out of service.

The Signaller must:

1. verbally instruct the Driver to proceed into the section ahead,
2. not allow the train to go forward to the starting signal in the advanced position until the train can proceed in to the section ahead. This is except where station work is required, and
3. ensure the Hand Signaller is properly briefed and understands the required duties.

When the permanent way operations have been completed and the signals are repaired, the Signal Supervisor must:

1. give the Road Foreman or employee in charge a certificate confirming that track circuit protection is restored, and
2. the Signaller must record the fact in the Train Register book in the case of home or starting signals.

7. Reflective Signs During Prolonged Periods of Reduced Speeds

Where track works make it necessary for trains to travel at reduced speed over a portion of line for a prolonged period, reflective signs, as described below, will be provided for use as follows.

a. Reflective Warning Sign

On the ARTC Network

The ‘Warning’ sign is a black bordered yellow triangle (pointing up) with a black ‘W’ (usually on a white square board with black borders) and figures indicating the distance in metres to the reflective ‘Caution’ sign. The sign is erected on the left hand side of the track, 2500 metres from the reflective ‘Caution’ sign.

Below the triangle, a yellow rectangular board with black numerals indicates the maximum speed that must not be exceeded by the Driver, on reaching the ‘Caution’ sign.

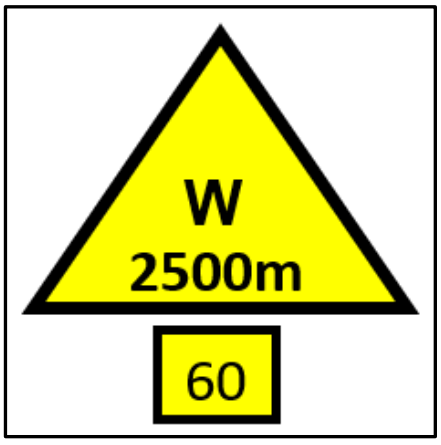

On the Regional Intrastate and Suburban Corridors

The `Warning' sign is a yellow board, fishtailed at each end with a red `W' painted on the face. It is displayed to the Driver of an approaching train. The sign is positioned 1200 metres from the outer limit of track repairs.

Below the sign, a rectangular board with black numerals indicates the maximum speed that must not be exceeded by the Driver, on reaching the `Caution' sign.

b. Reflective Caution Sign

The `Caution' sign is a yellow disc with a red `C' painted on the face. It is displayed to the Driver of an approaching train. The sign is positioned 200 metres from the outer limits of track renewal or repairs.

Below the disc, a yellow rectangular board with black numerals indicates the maximum speed permissible over track works.

c. Reflective 'NS' Sign

The 'NS' (normal speed) sign is a white rectangular board with a black 'NS' painted on the face. It is displayed to the Driver of an approaching train. The sign is positioned 200 metres in advance of the outer limits of the track repairs. It applies to passenger trains consisting of eight vehicles or less, electric suburban trains, light locomotives and rail motors.

d. Reflective ‘N’ Sign

The `N' (normal) sign is a white square board with a black `N' painted on the face. It is displayed to the Driver of an approaching train. The sign is positioned 1200 metres in advance of the outer limits of track repairs.

e. Compliance of Signs

Drivers must comply with the speed indicated by the signs over the track work operation. Except as provided in para (c) above, they must not increase speed until the locomotive has passed the `N' sign in advance of the outer limits of the track repairs.

When passenger trains are permitted to travel at a higher speed than freight trains, the letters `P' for passenger and `G' (goods) for freight trains is provided, followed by the speed permitted.

NOTE: Before reflective signs are utilised, employees will be notified by circular.

f. Locomotives Provided with Distance Counters

Where a locomotive is provided with a distance counter, the train may resume normal speed once the indication is received that the rear of the train has passed the ‘NS’ Sign. Trains in excess of 1200 metres in length must not resume normal speed until the indication is received that the rear of the train has passed the ‘NS’ Sign.

On the ARTC Network

The following Reflective Signs placement diagram will apply.
Note, this diagram and its contents are indicative and not to scale.

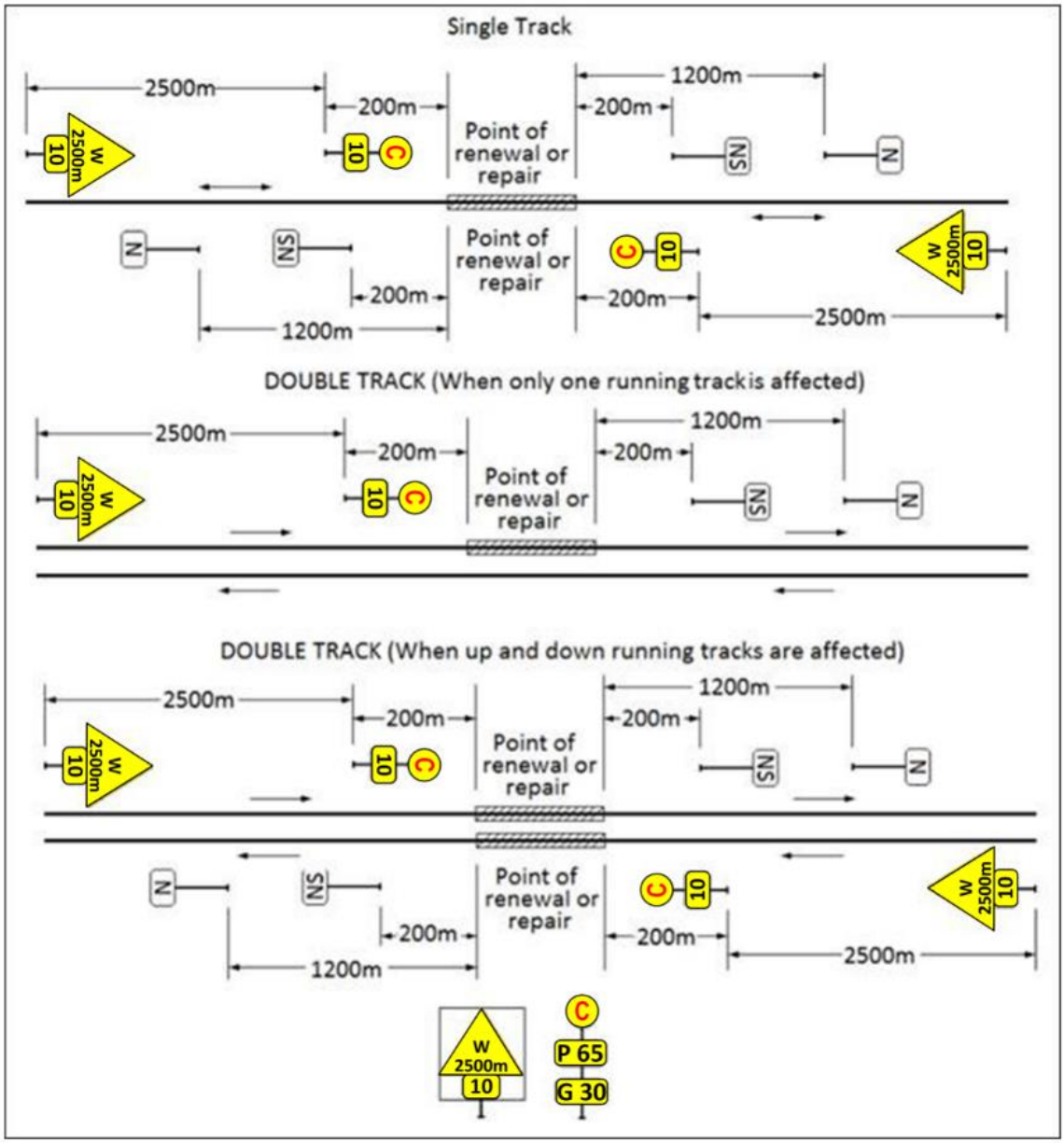

On the Regional Intrastate and Suburban Corridors

The following Reflective Signs placement diagram will apply. Note, this diagram and its contents are not to scale.

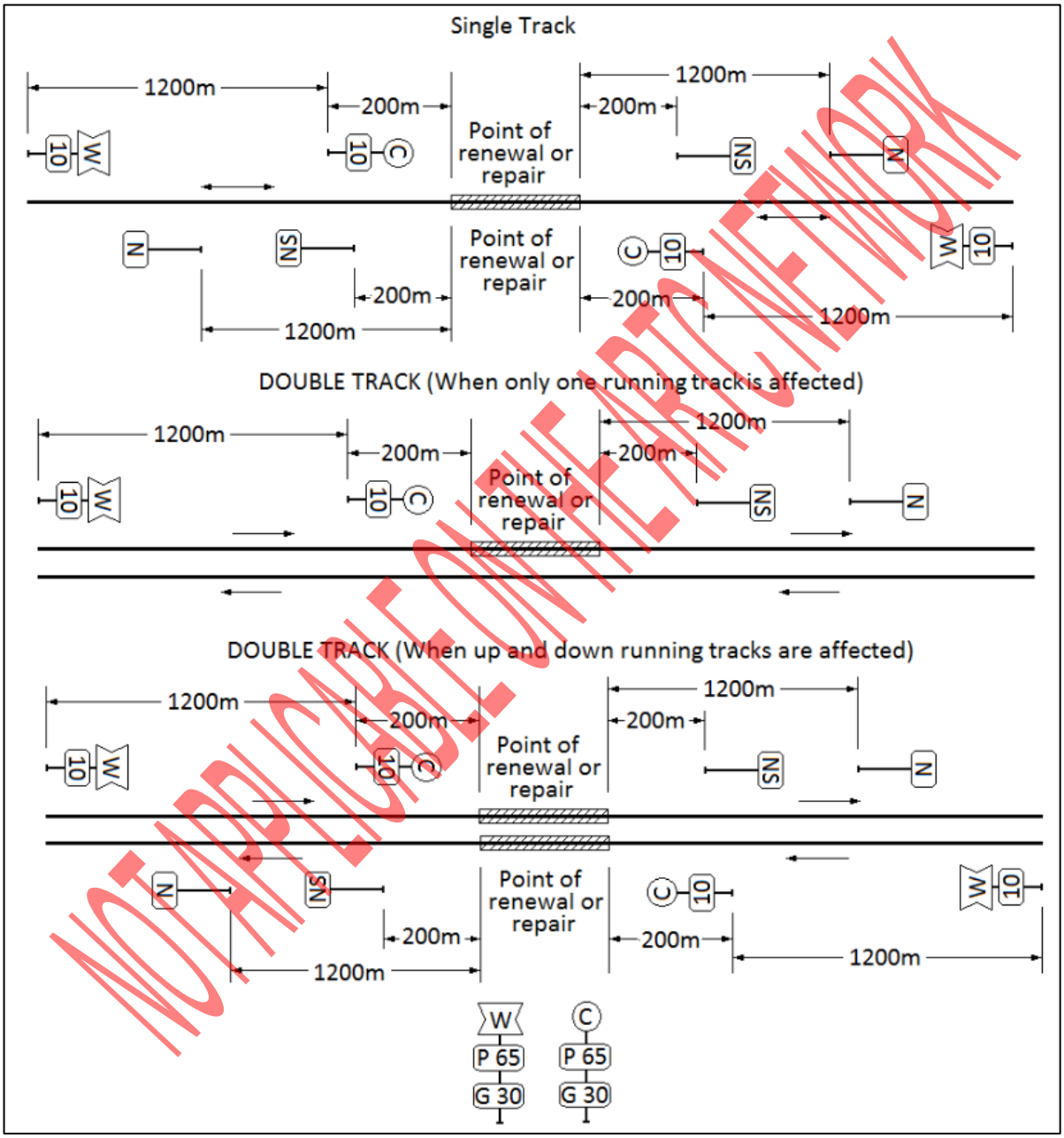

NOT APPLICABLE ON THE ARTC NETWORK

8. 'Absolute Occupation' of a Running Line

Note:

Absolute Occupation of a Running Line are not used on Phoenix Electronic Train Order System territory.

In certain circumstances, Absolute Occupation of a Running Line will be granted via the issue of a 'SWO' Circular Train Notice which will stipulate that the Occupation may commence after the passage of a particular Freight train. When arrangement is highlighted on the 'SWO' Circular Train Notice and the Freight train specifically listed is not running to schedule, and there would be delays incurred to the works associated with the Absolute Occupation, the following arrangements may take place in order to grant the Absolute Occupation at the time specified.

These arrangements will only apply if the Supervisor Track Force Protection Coordinator is in a position to be able to pilot the Freight train through the area of Absolute Occupation.

1. The Supervisor Track Force Protection Coordinator in charge of the Absolute Occupation must advise the Signaller that there is a requirement to commence works at the time the Freight train (specifically listed on the Train Notice SWO Circular) would normally pass through the location concerned.
2. The Signaller must inform the Train Network Controller of the Supervisor's Track Force Protection Coordinator requirements.
3. The Train Network Controller must then confer with the Superintendent Safeworking National Rules Manager or delegate in order to obtain authority for the Freight train concerned to be piloted through the area of Absolute Occupation by the Supervisor Track Force Protection Coordinator in charge.
4. Once authority has been obtained, the Train Network Controller must advise the Signaller accordingly. The Signaller in turn must advise the Supervisor Track Force Protection Coordinator in charge.
5. Upon the arrival of the Freight train concerned, the Supervisor Track Force Protection Coordinator in charge of the Absolute Occupation or delegate must pilot the train through the area of Absolute Occupation. The provisions of Rule 8 f & g (Section 15) of this Code of Practice must be observed in this instance.

a. Requirement of 'Absolute Occupation'

The respective Division or Section must give a minimum of ten working days' notice to allow sufficient time for special instructions to be issued.

b. Application for 'Absolute Occupation'

Prior to application, the Operations Manager Rail Safety may require a visit to be made to the work area. In this instance, the following personnel must attend:

1. Representative of the Operations Manager, Rail Safety,
2. person requiring the 'absolute occupation'. and
3. an officer of the Overhead Division, if switching arrangements for the overhead wiring are required.

They must clearly establish the:

1. boundaries of the area required,
2. protection of the area required, and
3. positioning of the flagmen.

c. Signatures on Diagram of the Area

After agreement has been reached, each representative officer will sign a copy of a diagram of the area requiring `absolute occupation'. It must accompany the application when forwarded to the Operations Manager Rail Safety, who, if in agreement, will countersign the diagram and return it to the Manager of the relevant Division or Section.

d. Prior to Occupation

The person Track Force Protection Coordinator in charge must not occupy the line until written permission has been obtained.

Before granting permission to occupy the line the Signaller or other person named in the special instructions must confer with the Signaller in advance and the Train Network Controller to ascertain that there is no train in the section to be occupied.

The person Track Force Protection Coordinator in charge of the work must, except as shown in Rule 8 (g) below, sign for the written permission received in the Signaller's Train Register book. The Signaller must countersign the entry.

e. Area Controlled by Signaller, Metrol

Where the area is Controlled by the Signaller, Metrol, the `absolute occupation' order may be obtained via the signal post telephone or the person requiring the occupation may proceed to the Metrol building. On proceeding to the Metrol building, the employee must sign the 'Absolute Occupation' order and the butt of the form in the book held by the Signaller. The Signaller, Metrol, may dictate over the telephone, details of the order, to the person requiring the 'absolute occupation'. These details must be repeated back and entered, by both employees, into the special books/forms. Both persons must exchange names, entering same in the special book/form. If the employee requiring the Occupation does proceed to the Metrol building, the lower half of the Special 'Absolute Occupation' form must be completed.

The 'absolute occupation' order must be cancelled by the person in charge when occupation is no longer required. The lower half of the special book/form must be filled in and telephoned to the Signaller. The Signaller must record the details as dictated in the special book/form. Both persons must exchange names, entering same in the special book/form.

The written certificate issued and received must be forwarded to the Manager for the region.

When an Absolute Occupation is required over an area that is controlled by more than one signalling control panel the following must apply:

The Signaller of the panel defined in the '0' Circular as the panel that is to issue the Absolute Occupation will contact the Signaller of the panel(s) that control the other areas required for the Absolute Occupation.

The Signaller(s) on those other panels must ensure that the Absolute Occupation is protected in their area and then countersign the Absolute Occupation.

The Absolute Occupation must be signed by the Signallers controlling the area of Absolute Occupation prior to it being granted.

f. Special Train

Should a special train be employed in connection with the work, a separate notice will be issued. The special train may be pushed as required under cover of the `occupation'. The person Track Force Protection Coordinator in charge or delegate must be present and accompany the Driver to and from the work point.

g. Entry of Special Train to Area of ‘Absolute Occupation’

Should it be necessary for the special train to enter onto that portion of line under `absolute occupation', the applicable fixed signals must be operated for the special train.

If the home signal, or, in the case of non-token single line systems, home departure signal, be unable to be placed to the `proceed' position, then the appropriate `caution order', suitably amended if necessary, must be issued to the Driver.

No train or locomotive other than the special train may be allowed to enter on that section of line in question until the work is completed. The Signaller concerned must receive a written certificate from the person in charge that the line is clear and safe for the passage of trains.

h. Electric Staff or Train Staff and Ticket System

When occupation is required on a section not worked under the electric staff or train staff and ticket system, the operations must be protected in accordance with this Code of Practice.

On a token system, the staff for the section must be handed to the person requiring the occupation.

The person to whom the staff is delivered must sign in the Train Register book, recording the time. The signature of the person returning the staff and time must also be recorded when the staff is returned.

i. Signalbox or Signalling Complex

The Signaller granting permission for 'absolute occupation' must inform the Signaller at the signalbox or signalling complex in advance. All levers giving access to the affected section must either be sleeved in the 'normal' position, or one of the following safety provisions the Signaller at the signalbox or signalling complex in advance applied:

1. the blocking command / facility,
2. track block command, or
3. point sleeve command.

This is to prevent any train or locomotive entering the area under `absolute occupation'.

j. On-track Maintenance Machines

On-track maintenance machines working in connection with an `absolute occupation', must not be permitted to pass home signals at the `Stop' position, unless the authority of the Signaller has first been obtained.

k. Single Line Working

If single line working is necessary during periods of 'absolute occupation' this Code of Practice must be complied with.

Where there are level crossings protected by boom barriers or flashing light signals the person requiring 'occupation' must arrange for competent work employees to act as flagman during the period of 'occupation'.

Before 'absolute occupation' is granted, the signal levers leading onto the 'occupied' section must be secured at the 'Normal' position.

9. Protection of an Area Under `Absolute Occupation'

When protecting an area under `absolute occupation', a flagman must be stationed at the fixed signal or other point determined by circular Train Notice as the boundary of the `absolute occupation' area. The flagman must place on the rail the three (3) ATWs 10 metres apart and exhibit the `stop' hand signal (red flag or light) until such time as the `absolute occupation' has been cancelled.

10. Employees Worker on the Infrastructure Department

a. Ballast Trains

During periods of inclement weather, employees workers and gangs working on ballast trains must not work on the running line, except during daylight when a signal can be visible from a distance of at least 500 metres.

b. Overhead Electrical Connections

The Ganger Track Force Protection Coordinator in charge of employees workers working on wagons, must personally warn the employees workers of the danger of allowing tools or appliances of any kind to touch overhead electrical connections.

c. Disarranged/Disconnected Overhead Structures

When any portion of overhead structures become disarranged or the catenary or contact wire or any of its connections become disconnected and hang loose on or near any running line or track, the person observing it must:

1. act to stop any approaching train, and
2. expeditiously inform the Train Network Controller, and the nearest Stationmaster or Signaller.

Care must be taken by employees workers not to come in contact with the disconnected wires.

d. Special Telephones

Employees must know the positions of special telephones and carefully note the working instructions. Special telephones are provided for communicating with sub-stations in case of accident or a disarrangement of the wires.

11. Duties of Site Supervisor Gangers

Duties of Gangers Site Supervisor include the following:

1. careful examination and, adjustment if necessary, of all points, crossing, hand locking bars and scotch blocks,
2. oil and keep clean the working parts of points and signals unless otherwise provided for,
3. maintenance of proper scotch blocks or derails on all sidings requiring them, and not to allow ballast, stones or other obstructions to accumulate which may interfere with the running of trains,
4. report to their road Foreman Team Manager if any hand locking bar, scotch block or derail is found to be improperly secured on any siding, whether in a station yard or elsewhere,
5. remove any obstruction to the proper working of signals or signal wires and report to the Network Controller or nearest Stationmaster or Signaller any defect observed in the connections of a signal, or automatic train stop,
6. report to the Road Foreman Network Controller every case in which any signal is disregarded by a Driver,
7. make safe and report to the Road Foremen Team Manager, any unsafe telephone pole, wires which are broken, slack, entangled, or touching each other or any building,
8. ensure the removal of all grass, boughs of trees, ballast, and litter from signal and telephone wires and points and connections,
9. ballast or other material is not left higher than rail level inside the wheel gauge and for a distance of 450 mm on the outside,
10. keep clear of rails any gravel, ballast or any other material, particularly ashes, which damage iron and steel rails,
11. disallow blasting on or near the railway without the authority of the Team Manager Infrastructure Maintenance or other authorised officer, and
12. close and fasten all occupation gates they find open and report circumstances.

Annual circulars are issued regarding procedures for burning off on railway land, and for sending and receiving 'WOXO' messages. All Infrastructure staff must make themselves conversant with these instructions.

12. Inclement Weather and Natural Disasters

a. Safety of the Way or Works

Road Foreman Team Managers and Site Supervisors Gangers are to use extreme vigilance as to the safety of the way or works during wet weather, thunderstorms or if floods are expected. They must ensure doubtful sections are free from danger of flood or slip, prior to the passing of a train, and stop a train if required. Hand Signallers must be provided when special precautions are necessary.

b. Ganger's Site Supervisor's Reports

Gangers Site Supervisors must report to their Road Foremen Team Manager periodically, the heights of floods on their lengths and mark the levels of same. Damages to culverts and bridges must be reported to the Team Manager Works Foreman for instructions.

c. Action in Case of Fire

Employees Workers observing fire must take immediate measures to extinguish it, providing the portion of line on which they are working can be left safe.

Drivers seeing fire by the side of the line or on any adjoining land will signal the fact by giving one short, one long, and one short whistle.

13. Removal of Livestock

Gangers Site Supervisors must keep their portion of the line clear and safe. Gangers Site Supervisors must immediately remove any livestock from within the fences. Adjoining fences must be kept in good repair. The circumstances, along with the name of the owner should be reported to the Team Manager. Road Foreman who must forward the report to the Manager Infrastructure Maintenance.

14. Maintaining a Clear Line

Foremen and Gangers Site Supervisors must:

1. see that broken chairs, rails, sleepers, or other defective materials are removed from the road with the least possible delay, and that sound materials are substituted,
2. report when gates are broken, fixed signals are out of order or when any other work requires immediate attention. It must be reported by telephone to the Team Manager, Road Foreman and Works Foreman,
3. carefully place tools, rails, sleepers, pieces of iron or wood, or other implements or materials, so as they are not within one metre of the rails. Disused materials must be removed from the line as soon as possible,
4. report all cases of broken rail to the Network Controller and Team Manager Road Foreman, and
5. exercise care to see that guys and scaffolding are kept at a proper clearance from the line during erection or repair of buildings.

15. Actions by Employees Workers on the Approach of a Train

On the approach of a train, maintenance staff and others at work on the line must abide by the following:

1. move clear and not remain on any running lines, nor remain between them. They must keep clear until the train has passed and ensure there is sufficient distance to see if a train is approaching on the other lines before recrossing the lines,
2. lie down if circumstances compel staff to remain within the 1.8 metres space between trains passing on adjoining lines,
3. the Ganger Track Force Protection Coordinator is to appoint a flagman to give necessary warning in tunnels, or where the approach of a train cannot be observed or heard in time for employees workers to seek adequate safety,
4. the Foreman, Ganger or other employee in charge Track Force Protection Coordinator must provide lookouts as described in Section 15 Infrastructure Works Rule 24 Lookout Working in cases of danger, when working singly or in gangs on or near lines in use for rail traffic., and

5. the lookout(s) must be instructed to act solely in their capacity and must be provided with all necessary equipment.

NOTE:

Where an authorised apparatus is provided for the purpose of giving warning it will not be necessary to employ lookout(s).

a. Movement of Ballast Train

When a ballast train has to be moved whilst employees workers are on the wagons, in a position designated as safe by the Operator, the Ganger Site Supervisor must warn them. Additionally, the Driver must sound the whistle before moving, and before reducing speed, sound one long, three short and one long whistle.

b. Employees Workers Working in Tunnel

Employees Workers, if possible, should stand in a small recess when working in a tunnel, when trains are approaching in both directions. Alternatively, employees workers must lie down, either in the space between the two running lines or between the line and the side of the tunnel, until the trains have passed.

c. Action by Drivers

On entering a tunnel and in long tunnels, and when entering and passing deep cuttings on curves, Drivers are instructed to:

1. sound the whistle and repeat occasionally, and
2. not to throw out hot water, fire or cinders. Additionally, this should not be done when passing over points, bridges, level crossings and viaducts.

d. Unusual Occurrences on Approaching Train

Employees Workers must endeavour to direct the attention of the Driver by hand signals for any unusual occurrence including the following:

1. signals of alarm by a passenger,
2. goods falling off,
3. indications of fire in a vehicle,
4. hot axle-box,
5. doors of carriages or trucks open outwards, or
6. chains or lashings hanging loose.

16. Securing the Permanent Way

Prior to leaving at night, Gangers Site Supervisors must ensure that the permanent way and tracks are left in a safe condition. Areas which have been worked on during the day are to be filled in, and ballast is to be levelled off before leaving work at night. Where this cannot be done, Gangers must notify the Stationmaster, Signaller or Train Controller.

17. Reduction in Train Speed Due to Track Works

a.

When it is necessary for a train to travel at reduced speed over a portion of line due to repairs and there is insufficient time to arrange for the proper Warning and Caution boards, the Ganger Track Force Protection Coordinator in Charge of the operation must send a flagman back at least 2500 metres (or as far as necessary) to protect the affected area.

b. Positioning of Flagmen

The Flagman must place two A.T.Ws ten metres apart on one rail of the affected line, and exhibit a Caution Signal by waving a green flag or green light slowly from side to side. The signal must be clearly visible to the Driver of an approaching train.

c. Inclement Weather

During inclement weather when the Caution signal cannot be seen for a distance of at least 500 metres, the Flagman must after fixing the A.T.Ws on the line as prescribed above, exhibit a Red Hand signal. When the speed of the approaching train has been sufficiently reduced, the Flagman must verbally warn the Driver of the reason for the reduction in speed and the location. The Driver must not go forward if the verbal communication is not understood correctly.

d. Flagman Arrives at Signal Box

If the Flagman in going back arrives at a Signalbox or if the area is within the protection of the Home Signal, the Flagman need not proceed beyond the Signalbox but must advise the Signaller of the reason for reduction in speed.

When the fixed signals are placed to the Proceed position the Flagman must exhibit the Caution signal. The Flagman need not place A.T.Ws on the rail unless it is necessary to attract the attention of the Driver.

e. Returning to Normal Speed

In addition to complying with the above, the Ganger Track Force Protection Coordinator in charge must place a second Flagman to exhibit a steady green hand signal at the point where normal speed can be resumed. The Flagman must be at least 2500 metres ahead of the portion of track affected.

f. Hand Signals to be Exhibited Clearly

The Flagmen must exhibit their hand signals in such a manner that they will not conflict with any hand signal being exhibited for a train approaching in the opposite direction.

Train crews will understand that after receiving the Caution signal as laid down above, a green hand signal held steadily in the hand will indicate that normal speed may be resumed.

18. Absolute Occupation of a Running Line

a. Driver of Special Train to Read Absolute Occupation Form Order

Where a special train is employed in connection with the Absolute Occupation, the person Track Force Protection Coordinator in charge or delegated representative accompanying the train, must allow the Driver the opportunity of reading the Absolute Occupation form Order. After reading the Absolute Occupation form Order, the Driver must endorse the Absolute Occupation form Order with the time, date and signature.

b. Protection of an area under Absolute Occupation

The Flagman appointed at the entrance to the Absolute Occupation area, must not allow a train to pass into or depart from the Occupation area unless the following exists:

Train or Track Machine to proceed into the Occupation Area:

The person Track Force Protection Coordinator in charge (or delegated representative) has informed the Flagman of the movement.

Train or Track Machine to depart from the Occupation Area:

The Flagman has been advised by the Driver that the movement may be performed.

Once the above instructions have been received, the Flagman must withdraw the Red Hand Signal.

c. Double Lines - Train/Track Machine leaving the area of Occupation in the wrong direction

Where a Train or Track Machine is required to leave the area of occupation on the wrong line (i.e. wrong direction) the following procedures must be adopted:

a) The Driver must bring the Train or Track Machine to a stand at the Red Hand Signal displayed by the Flagman protecting the occupation area,

b) The Driver must then communicate with the Signaller and request permission to depart from the occupation area,

c) If permission is granted, the Driver must then inform the Flagman accordingly.

d. Series of Absolute Occupations Issued

Where a Train/Track Machine is required to travel through a number of consecutive occupation areas on the wrong line and an Intermediate Signalbox(es) exist, the instructions outlined in Clause (c) must be observed at each entrance/exit point.

19. Absolute Occupation/Power Off Conditions Protection of Work Sites

The following procedures are applicable for work site protection, when, the securing of points is utilised.

The procedure for securing points or catch points normal or reverse is to provide protection to prevent the entry of any rail vehicle (or Electric trains, where only power is off) into the work site.

The procedure of securing points, or catch points for line protection can only be authorised by the Superintendent Safeworking Operations Manager, or delegate. the Senior Inspector delegated by the Superintendent Safeworking.

Signallers must ensure no points or catch points are secured for line protection unless they are provided with a copy of the agreed line protection.

A supervisor of a work site is not permitted to utilise the securing of points or catch points as line protection, unless the agreed protection is authorised, or, the Operations Manager office of the Superintendent Safeworking has given authorisation.

a. Definitions:

Delegated Officer:

Shall be the person designated by the Operations Manager Superintendent Safeworking to authorise and sign agreed protection documents.

Operational Supervisor: **Track Force Protection Coordinator (in charge of the Absolute Occupation:**

Shall be the person having total control and responsibility of the work site, all persons and authorised procedures within the work site will be subordinate.

Agreed Protection:

Shall be the document of agreement between the Operations Manager or delegated officer or office of Superintendent Safeworking, authorising the securing of points as a method of line protection.

Signaller:

Shall be the person responsible for issuing the Absolute Occupation and who controls the fixed signals and points.

Locking Device:

Shall be the device utilised by the Track Force Protection Coordinator or his representative Operational Supervisor to secure the points to prevent movement away from the desired position.

Independent Padlock:

Shall be the padlock utilised to secure the locking device to prevent it from being removed from the points.

NOTE: The An independent padlock must be used utilised to secure the locking device, must be a 4D type padlock. The keys to the padlock must be retained by the Track Force Protection Coordinator. Operational Supervisor.

b. Obtaining Permission to Secure Points for Line Protection

Should any group, division, or contractor require to secure points or catch points for the purpose of line protection, application is to be submitted in writing to the Operations Manager or delegate Senior Inspector at least ten working days prior to the Absolute Occupation being required.

When receiving an application for Absolute Occupation requiring the securing of points for line protection at a complicated junction, the Operations Manager or delegate Senior Inspector will confer with the person requesting Absolute Occupation and arrange for all parties involved to attend a site meeting.

When arranging the meeting, the Senior Inspector is responsible for ensuring a representative of the Train Overhead system is present, if the works impact or involve the Electrical Train Overhead system.

On visiting the location, the persons involved are responsible for:

1. identifying the points to be secured,
2. ensuring the points to be secured are identifiable with a distinguishing number,
3. ensuring the points to be secured are provided with an indication displaying the normal and reverse position,
4. ensuring the points to be secured will provide absolute line protection to the work site,
5. examine the effect of securing points on the interlocking, including flank locking,
6. examine the effect upon the Electrical Train Overhead system if Power Off conditions will apply.

Upon acceptance of the procedures to be in force as part of the Absolute Occupation, or "Power Off' conditions, all persons will be required to sign an agreed protection plan.

The agreed protection will indicate:

1. the points to be secured,
2. the position the points will be secured in,
3. the location of Flagmen, if required,
4. the Electrical Train Overhead switching arrangements, if required,
5. any procedure involved with the safety of the work site.

All parties who sign the agreed protection plan are bound by the contents.

c. Distribution of Agreed Protection

The person who requested and signed the agreed protection plan shall be responsible for ensuring a copy is provided to the Track Force Protection Coordinator in charge of the Absolute Occupation. Operational Supervisor. The Track Force Protection Coordinator Operational Supervisor is responsible for ensuring a copy is held for the duration of the Absolute Occupation at the work site.

The Operations Manager or delegate Senior Inspector shall arrange for the Train Notice circular approving the Absolute Occupation to be published. printed, signed and distributed.

The authorising Train Notice circular will nominate the points to be secured and the position the points will be secured in.

d. Applying to Signaller for Absolute Occupation

The Track Force Protection Coordinator Operational Supervisor shall request from the Signaller nominated on the Absolute Occupation Train Notice circular, the authority for Absolute Occupation.

The Signaller must ensure the criteria for granting Absolute Occupation are met, and provide to the Track Force Protection Coordinator Operational Supervisor, the duly completed Absolute Occupation form.

The Track Force Protection Coordinator Operational Supervisor upon receiving the Absolute Occupation form or the copy dictated over the recorded telephone system, shall inform the Signaller of the points and position of the points to be secured as part of the Absolute Occupation.

The Signaller shall refer to the Absolute Occupation Train Notice circular and then place the points designated in the required position and apply locking devices or commands to prevent the operation of the points.

The points must be inspected to ensure they are correctly set, the Track Force Protection Coordinator Operational Supervisor or his representative must;

1. apply the locking device to the points;
2. apply an independent padlock to the locking device;
3. lock the independent padlock;
4. test the locking device to ensure it is correctly applied and secured;
5. inform the controlling Signaller the points are secured and the position the points are secured in.

If for any reason the nominated points are unable to be placed and detected in the required position, the Track Force Protection Coordinator Operational Supervisor is to be informed.

If the Track Force Protection Coordinator Operational Supervisor is informed the designated points cannot be secured as stated in the Absolute Occupation Train Notice circular, line protection must be provided in accordance with the rules.

If more than one group is working within the work site, each group must provide and place their own independent padlock on the locking device. This will not apply where multiple groups are working in an area under the `Permit to Foul the Line' Work' procedures.

The Track Force Protection Coordinator Operational Supervisor is responsible for ensuring the padlocks are not removed until advice is received from all groups that the line is clear and fit for normal traffic.

The Signaller and Track Force Protection Coordinator Operational Supervisor are responsible for entering the details in the Train Register/Log Book.

Should any fault occur to the signalling system whilst the points are secured and the Signals Representative and Communications Group is required to attend, the person attending must be informed by the Signaller the points are secured for line protection. The sole person authorised to arrange the release of the lock is the Track Force Protection Coordinator. Operational Supervisor.

e. Entry/Exit of Train to Work Site

Should a train or rail vehicle be required to enter the work site via the secured points, the Track Force Protection Coordinator Operational Supervisor must;

1. ensure all work parties in the Occupation Zone are aware that a rail vehicle will enter the Occupation Zone,
2. ensure any work party the rail vehicle shall arrive at or pass through are provided with a Flagman displaying a red hand signal placed a sufficient distance from the work point.
3. confer and arrive at an understanding with the Signaller as to what will occur,
4. place a Flagman provided with a red hand signal and A.T.Ws at the entrance to the Occupation Zone to protect the line whilst the point clip is removed,
5. release the lock and remove the locking device,
6. inform the Signaller the points are free to be moved,
7. accompany the rail vehicle into the work site,

8. when the last vehicle has cleared the points to be secured, inform the Signaller the position the points are required in,
9. place locking device on points, lock and test to ensure they are secure, then inform the Signaller,
10. when the points are secured and locked to provide line protection to the Occupation Zone, remove the Flagman.

The Track Force Protection Coordinator Operational Supervisor shall be responsible for the movement of vehicles within the Absolute Occupation Zone.

When it is necessary for a rail vehicle to leave the Occupation Zone the Track Force Protection Coordinator Operational Supervisor must;

1. ensure a Flagman displaying a red hand signal is provided a sufficient distance from the secured points to stop the rail vehicle passing over the points whilst secured,
2. arrive at an understanding with the Signaller as to the movement that will occur,
3. provide a Flagman at the entrance to the Occupation Zone with A.T.Ws and a red hand signal,
4. remove the locking device,
5. inform the Signaller to move the points to the required position,
6. obtain permission from the Signaller to allow the rail vehicle to depart from the Occupation Zone,
7. display a green hand signal to the driver of the rail vehicle.

After the rail vehicle has departed, the Flagman must display a red hand signal to prevent any vehicle from entering the work site until the points are locked and secure protecting the Occupation Zone.

f. Cancellation of Absolute Occupation

When all work is complete and the Absolute Occupation Zone is clear and safe for normal traffic, the Track Force Protection Coordinator Operational Supervisor must,

1. remove all locking devices from the track,
2. return the Absolute Occupation to the Signaller,
3. inform the Signaller all locking devices have been removed,
4. remain on duty whilst the Signaller tests all points to ensure no locking device remain in position.

The Signaller must ensure the points are tested and ensure they are operating correctly.

g. Preventing Entry of Electric Trains into a Portion of Line where Overhead Traction Power is Switched Off

Where the Overhead Department requires "Power Off' for electric traction, the securing of points as described, may be utilised to prevent electric trains from entering the "dead section".

20. Absolute Occupation / Local Possession Authority - Multiple Work Groups

The following instructions will apply whenever more than one work group is required to work under the cover of an Absolute Occupation or Local Possession Authority.

a. Definitions

`Supervisor in Charge' means the authorised Track Force Protection Coordinator representative taking control of an area under Absolute Occupation or Local Possession Authority in Phoenix Electronic Train Order Territory.

`Work Group Supervisor' means the person authorised Track Force Protection Coordinator to be in charge of a work group required to work under the cover of an Absolute Occupation or Local Possession Authority in Phoenix Electronic Train Order Territory.

‘Co-ordinating Work Group Supervisor’ means the authorised Track Force Protection Coordinator to be in charge of multiple work groups required to work under the cover of an Absolute Occupation or Local Possession Authority in Phoenix Electronic Train Order Territory.

b. Permit to Foul the Line

1. This procedure consists of the issue of a Permit to Foul the Line by the Supervisor in Charge, to the Work Group Supervisor. The Permit to Foul the Line grants authorisation for a group to work under the cover of an Absolute Occupation or Local Possession Authority.
2. The Work Group Supervisor must obtain a Permit to Foul the Line prior to commencing any work.
3. The Permit to Foul the Line must only be issued or cancelled by the Supervisor in Charge of the Absolute Occupation or Local Possession Authority.
4. After receiving the Absolute Occupation or Local Possession Authority from the authorised Signaller/Train Network Controller, the Supervisor in Charge must complete and issue a Permit to Foul the Line (see Form No. 2421) to the of each work group intending to work under the cover of the Absolute Occupation or Local Possession Authority. A Permit to Foul the Line may be issued in person or remotely.

   The Permit to Foul the Line indicates:

   - the Date and Time
   - the Absolute Occupation/Local Possession Authority circular Train Notice number
   - the Name and Signature of the Supervisor in Charge
   - the Name and Signature of the Work Group Supervisor
   - the Name of the Division or individual Company
   - the boundary of the Absolute Occupation/Local Possession Authority
   - the Time and Date when the Permit to Foul the Line is required to be returned.

5. Issuing a Permit to Foul the Line

   a) When issued with a Permit to Foul the Line in person, the Work Group Supervisor must sign the Master Permit to Foul the Line, held by the Supervisor in Charge, to indicate receipt of a Permit to Foul the Line.

   b) When issued with a Permit to Foul the Line remotely, the Supervisor in Charge must dictate the Permit to Foul the Line to the Work Group Supervisor. The Work Group Supervisor must repeat the details of the Permit to Foul the Line to the Supervisor in Charge exactly as it was received. The Supervisor in Charge must ensure the details have been repeated back correctly and recorded on the Master Permit to Foul the Line form that the Permit to Foul the Line was provided remotely.

6. The details of all Permits to Foul the Line must be recorded by the Supervisor in Charge on the Master Permit to Foul the Line form (see Form No. 2420). The Supervisor in Charge must ensure sign the Master Permit to Foul the Line form or where the Permit to Foul the Line has been provided remotely, the Supervisor in Charge must record on the Master Permit to Foul the Line form that the Permit to Foul the Line was provided remotely.

   Should the number of work groups or changeover Supervisors exceed the number of spaces on the Master Permit to Foul the Line form, an additional master Permit to Foul the Line form must be completed. In this case, each master Permit to Foul the Line form must be numbered and endorsed consecutively.

7. The Master Permit to Foul the Line form must remain in the possession of the Supervisor in Charge.

8. Where authority is given for rail traffic a train to enter the area of Absolute Occupation or Local Possession Authority, the Supervisor must ensure that each Work Group Supervisor is informed of the train's passage. The Work Group Supervisor must accompany the train through the area over which the Co-ordinating Work Group Supervisor is responsible for.

9. Should there be a change of Work Group Supervisor during the period of the Absolute Occupation or Local Possession Authority, the changeover Work Group Supervisor must sign the Permit to Foul the Line form and similarly sign the Master Permit to Foul the Line form held by the Supervisor in Charge, or where the Permit to Foul the Line form was issued remotely, the Work Group Supervisor must sign the Permit to Foul the Line form and advise the Supervisor in Charge of the changeover. The Supervisor in Charge must record the changeover details on the Master Permit to Foul the Line form. This must be carried out prior to the changeover Work Group Supervisor taking charge of the work group.
10. If the Supervisor in Charge of the Absolute Occupation or Local Possession Authority is to be changed during the period of Occupation or Local Possession Authority, the existing Master Permit to Foul the Line form must be collected from the outgoing Supervisor in Charge. The changeover Supervisor in Charge must endorse the Master Permit to Foul the Line form, and then endorse each Master Permit to Foul the Line form which has been issued. The changeover Supervisor in Charge must show the Time and Date of Changeover, and the new Supervisor's name. This information must be shown in the space provided on the Master Permit to Foul the Line form.
11. When the work group have completed their work and all staff, machinery and equipment and protection are clear of the line, the Work Group Supervisor must return the Permit to Foul the Line to the Supervisor in Charge.

    The Supervisor in Charge must cancel the Permit to Foul the Line by writing `Cancelled' together with the Time and Date. Both the Supervisor in Charge and Work Group Supervisor must sign the cancelled Permit to Foul the Line form.

    Where the Permit to Foul the Line is to be returned remotely, the Work Group Supervisor must advise the Supervisor in Charge that the work group have completed their work, and all staff, machinery, equipment and protection is are clear of the line. Both the Supervisor in Charge and Work Group Supervisor must write `Cancelled' with the Time and Date and sign their copy of the Permit to Foul the Line form. The Supervisor in Charge must print the name of the Work Group Supervisor and write ‘remotely’ on their copy of the Permit to Foul the Line form. The Work Group Supervisor must print the name of the Supervisor in Charge and write ‘remotely’ on their copy of the Permit to Foul the Line.

    The Supervisor in Charge and Work Group Supervisor must repeat back the details of cancellation to ensure the information is correctly understood.

The Work Group Supervisor is personally responsible for ensuring that all staff, machinery, and equipment and protection are clear of the line, prior to returning the Permit to Foul the Line.

12. Once the Permit to Foul the Line has been returned, the Work Group Supervisor must not permit the group to again obstruct the line.
13. The Supervisor in Charge must then cancel the Master Permit to Foul the Line, endorsing it with the word `Cancelled' the Time, Date and Supervisor's signature. The Absolute Occupation or Local Possession Authority may then be returned to the Signaller/Train Network Controller.
14. The Absolute Occupation must not be cancelled or Local Possession Authority fulfilled until all Permits to Foul the Line are in possession of the Supervisor in Charge, and have been cancelled or have been confirmed as being cancelled.
15. All cancelled Permits and Master Permits to Foul the Line must be forwarded to the Team Manager for the Corridor. Safety Standards Officer - Level 4, Flinders St., in the case of the Suburban area, and the Manager Rail Safety, in the case of Country areas.

c. Protecting the Limits of a Permit to Foul the Line within an Absolute Occupation

When more than one work group is required to work under the cover of an Absolute Occupation and once the 'Permit to Foul the Line' has been issued, each work group must be protected by work site delineation markers placed at least 500 metres on each side of the work group.

When protecting a work group under a Permit to Foul the Line, the Work Group Supervisor must place the work site delineation markers, at all points of entry to the work site. The work site delineation markers must be placed at least 500 metres from the work site until such time as the Permit to Foul the Line is to be cancelled.

Work groups less than 500m apart must be treated as one work site. A Co-ordinating Work Group Supervisor must be nominated and agreed to by the affected Work Group Supervisors. The Co-ordinating Work Group Supervisor must obtain the Permit to Foul the Line from the Supervisor in Charge and is responsible for the protection of the work site.

If work groups are more than 500 metres but less than 1000 metres apart, the work site delineation marker protection must be placed midway between the work groups.

If more than one group is working within the work site and rail traffic movements will occur, delineation must be provided between the work groups.

Note:

The work site must be contained sufficiently to allow the required protection arrangements.

The Work Group Supervisor must make sure that the work site delineation markers are clamped to the head of the left-hand rail in the expected running direction of rail traffic.

The work site delineation marker must clearly indicate the contact details of the Work Group Supervisor(s).

The Work Group Supervisor must make sure there is good and distant view of the work site delineation markers.

Note:

Protection requirements for work sites within Local Possession Authorities are described in the Addendum – Phoenix Electronic Train Order System.

Work site delineation markers

Work site delineation markers are:

- yellow in colour
- double sided
- have two flashing red lights on one side
- have two flashing yellow lights on the other side.

The red flashing lights are to be positioned facing rail traffic approaching the work site.

The flashing yellow lights are to be positioned facing the work site.

Where a single work site delineation marker is to be placed between to work sites, the Work Group Supervisor's must come to a clear understanding of the positioning of the marker and advise rail traffic crews of its location and the adjoining work site.

Entrance to work site (two flashing red lights)

Not to be passed without the authority of the Work Group Supervisor.

Exit from work site (two flashing yellow lights)

Not to be passed without the authority of the Supervisor in Charge of the Absolute Occupation.

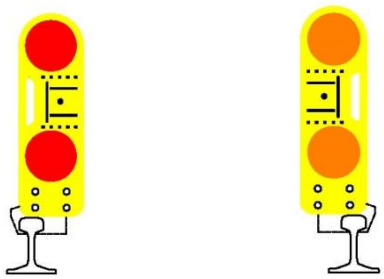

Example of work site delineation marker clamped to the head of the rail.

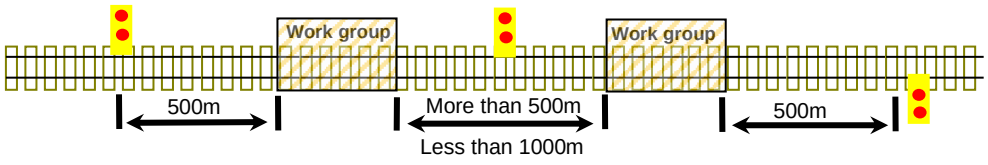

Example of Protection Arrangements for multiple work groups within a single work site more than 500m but less than 1000m apart using work site delineation markers

Example Master Permit to Foul the Line form (Form No. 2420) – page 1

ARTC

Master Permit To Foul The Line
Form No. 2420

TO BE ISSUED AFTER AN ABSOLUTE OCCUPATION / LOCAL POSSESSION AUTHORITY HAS BEEN GRANTED BY AN AUTHORISED NETWORK CONTROLLER

Date:	**Time:**	**Absolute Occupation / Local Possession Authority Train Notice No:**
Supervisor in Charge Name:		**Signature:**

A PERMIT TO FOUL THE LINE HAS BEEN ISSUED FOR WORK GROUPS TO WORK IN THE SECTIONS OF THE LINE INDICATED HEREUNDER

CHANGEOVER SUPERVISOR IN CHARGE		
	(PRINT & SIGN NAME)	(TIME & DATE OF CHANGEOVER)
CHANGEOVER SUPERVISOR IN CHARGE		
	(PRINT & SIGN NAME)	(TIME & DATE OF CHANGEOVER)
CHANGEOVER SUPERVISOR IN CHARGE		
	(PRINT & SIGN NAME)	(TIME & DATE OF CHANGEOVER)
CHANGEOVER SUPERVISOR IN CHARGE		
	(PRINT & SIGN NAME)	(TIME & DATE OF CHANGEOVER)
CHANGEOVER SUPERVISOR IN CHARGE		
	(PRINT & SIGN NAME)	(TIME & DATE OF CHANGEOVER)

Form MPTF This document is uncontrolled when printed. Page 1 of 2 Issue 2 Revision 0 Effective from 04 October 2015

Example Master Permit to Foul the Line form (Form No. 2420) – page 2

ARTC

Master Permit To Foul The Line
Form No. 2420

Permit No.	Time / Date Issued	Time / Date Returned	Permit Limits (km) From	To	Track Protection Coordinator Details (Name and Phone No.) and Work Group	Repeat Back correctly (Signature)	Time

Form MPTF This document is uncontrolled when printed. Page 2 of 2 Issue 2 Revision 0 Effective from 04 October 2015

Example Permit to Foul the Line form (Form No. 2421) – page 1

ARTC

Permit To Foul The Line
Form No. 2421

Permit No:

TO BE ISSUED AFTER AN ABSOLUTE OCCUPATION / LOCAL POSSESSION AUTHORITY HAS BEEN GRANTED BY AN AUTHORISED NETWORK CONTROLLER

Date:	Time:	Train Notice No:

Work Group Supervisor Name:

Work Group Supervisor Phone No:

A Permit to Foul the Line has been issued for Work Groups to work in the Section of Line indicated hereunder:
_____
_____
_____

This Permit to Foul Must Be Returned Before: ..... hours on .....date

Signed:	Date:	Time:
Supervisor In Charge (Track Force Protection Coordinator)		

Signed:	Date:	Time:
Work Group Supervisor (Track Force Protection Coordinator)		

Repeated Back Correctly:		
Supervisor In Charge/Work Group Supervisor Signature		
	Date:	Time:

CANCELLED		
Signed:	Date:	Time:
Work Group Supervisor (Track Force Protection Coordinator)		

Repeated Back Correctly:		
Supervisor In Charge/Work Group Supervisor Signature		
	Date:	Time:

Form MPTF This document is uncontrolled when printed. Page 1 of 2 Issue 2 Revision 0 Effective from 04 October 2015

Example Permit to Foul the Line form (Form No. 2421) – page 2

ARTC

Permit To Foul The Line
Form No. 2421

CHANGEOVER WORK GROUP SUPERVISOR

(PRINT & SIGN NAME) (TIME & DATE OF CHANGEOVER)

CHANGEOVER WORK GROUP SUPERVISOR

(PRINT & SIGN NAME) (TIME & DATE OF CHANGEOVER)

CHANGEOVER WORK GROUP SUPERVISOR

(PRINT & SIGN NAME) (TIME & DATE OF CHANGEOVER)

CHANGEOVER WORK GROUP SUPERVISOR

(PRINT & SIGN NAME) (TIME & DATE OF CHANGEOVER)

CHANGEOVER WORK GROUP SUPERVISOR

(PRINT & SIGN NAME) (TIME & DATE OF CHANGEOVER)

CHANGEOVER WORK GROUP SUPERVISOR

(PRINT & SIGN NAME) (TIME & DATE OF CHANGEOVER)

CHANGEOVER WORK GROUP SUPERVISOR

(PRINT & SIGN NAME) (TIME & DATE OF CHANGEOVER)

CHANGEOVER WORK GROUP SUPERVISOR

(PRINT & SIGN NAME) (TIME & DATE OF CHANGEOVER)

CHANGEOVER WORK GROUP SUPERVISOR

(PRINT & SIGN NAME) (TIME & DATE OF CHANGEOVER)

CHANGEOVER WORK GROUP SUPERVISOR

(PRINT & SIGN NAME) (TIME & DATE OF CHANGEOVER)

CHANGEOVER WORK GROUP SUPERVISOR

(PRINT & SIGN NAME) (TIME & DATE OF CHANGEOVER)

CHANGEOVER WORK GROUP SUPERVISOR

(PRINT & SIGN NAME) (TIME & DATE OF CHANGEOVER)

CHANGEOVER WORK GROUP SUPERVISOR

(PRINT & SIGN NAME) (TIME & DATE OF CHANGEOVER)

CHANGEOVER WORK GROUP SUPERVISOR

(PRINT & SIGN NAME) (TIME & DATE OF CHANGEOVER)

Form MPTF This document is uncontrolled when printed. Page 2 of 2 Issue 2 Revision 0 Effective from 04 October 2015

21. Track Warrant Working

A Track Warrant is the an authority for unplanned infrastructure work activities that do not require the rescheduling of timetabled rail traffic and is issued by either a Train Network Controller or a Signaller (dependant on the Safeworking System) to the Track Force Protection Coordinator Track Supervisor of the work site as authority to foul the Main Running Line.

The Track Warrant form **(Form TW 1)** showing the details required to issue **(Part 1)** and return **(Part 2)** a Track Warrant must be used.

The issue of a Track Warrant will only apply on Main Running Lines.

a. General Conditions

Track Warrants may be issued for:

- Infrastructure maintenance activities where the track may be broken or otherwise obstructed whilst the work is being carried out.
- Infrastructure maintenance activities where one or more Track Vehicles or Track Machines are to be used within two **three metres** of a Main Running Line.

A Track Warrant **must not be issued in the same section** where:

- Permission has been given for the issue of an Absolute Occupation,
- The line is Booked Out of Service, or
- Track Permission has been granted for a Road Rail journey, unless the Road Rail vehicle operator is advised and agrees to the issue of the Track Warrant.

A Track Warrant <u>must not</u> be used:

- If a plant train is to operate within the section of track.
- To cover works on the obstructed line where Single Line Working is in force.
- For major planned works that would necessitate the rescheduling of timetabled rail traffic.

Protection Under Track Warrants

The work performed under a Track Warrant must will not be protected by **STOP** signs / red lights placed at least 500 metres on each side of the work site. Audible Track Warning Signals or Hand Signals.

If points can be secured with point clips and locks for a different route to prevent unauthorised entry of rail traffic to the Track Warrant limits, **STOP** signs / red lights are not required.

Note: Before securing points, the Track Force Protection Coordinator Track Supervisor must obtain the Train Network Controller / Signallers authority.

When protecting an area under `Track Warrant', the Track Force Protection Coordinator Track Supervisor must place the STOP signs / red lights, at all points of entry to the work site. The STOP signs / red lights must be placed at least 500 metres from the work site until such time as the Track Warrant is to be returned.

Unless a set of points can be secured to prevent access to the portion of track within the ‘Track Warrant’ limits, the distance between the signal protecting, or the sign designating the limits of the ‘Track Warrant’ and the work site must not be less than 500m.

Note: A Track Warrant must extend sufficiently to include protection arrangements.

The Track Force Protection Coordinator Track Supervisor must make sure that the STOP signs / red lights are clamped to the head of the left-hand rail in the expected running direction of rail traffic. If it is not possible to clamp the STOP signs / red lights to the head of the rail, they must be placed in the middle of the track.

Note: The Track Force Protection Coordinator Track Supervisor must make sure there is good and distant view of the **STOP** signs / red lights.

Points within the limits of the Track Warrant must be secured with point clips and locks to prevent access to the portion of track.

A Train is not permitted to enter a section of line covered by a Track Warrant until the Track Force Protection Coordinator Track Supervisor returns the Track Warrant to the Train Network Controller or Signaller.

Note: If a track vehicle or road/rail vehicle journey is stopped to carry out work, the work must be protected as a work site.

Example of STOP sign / red light clamped to the head of the rail.

Issue of One or More Track Warrants in the Same Section

With the exception of the **Section Authority** system, One or more Track Warrants may be issued for the one section, provided the work areas do not overlap.

Numbering of Track Warrants

Track Warrant forms are numbered consecutively by the issuing Train Network Controller or Signaller, commencing with number 1 at 0001 hours each day.

Where electronic forms are used, the electronic system will generate the number for each form.

Track Warrant to be Returned in Sufficient Time

All work performed under a Track Warrant must be arranged so that the Track Warrant has been returned to the Train Network Controller or Signaller and the track is clear and safe for rail traffic at least 20 minutes prior to the scheduled arrival of a train at either end of the affected section.

Issue and Receipt of Track Warrants

A Track Warrant may be issued to the Track Force Protection Coordinator Track Supervisor either:

- ***verbally by radio or phone -*** a Train Network Controller or Signaller dictates the details in **Part 1** of the Track Warrant form to the Track Supervisor requesting the Track Warrant, or
- ***in person -*** a Signaller completes all the details in **Part 1** of the Track Warrant form and hands it to the Track Force Protection Coordinator Track Supervisor requesting the Track Warrant.

A Track Warrant must may only be received by a person (the Track Supervisor) who has been is qualified to **Level 3 - Train** as a **Track Force Protection Coordinator.**

Infrastructure Service Providers must ensure that staff who are required to apply for a Track Warrant are in possession of a valid Train Track Force Protection Coordinator's ticket.

Once a Track Warrant is Issued

Once a Track Warrant has been issued authorising the Main Running Line to be fouled, a movement must not be authorised to enter the applicable section until the Track Warrant is returned and advice has been received that the track is clear and safe for normal rail traffic.

Return of Track Warrants

The Track Force Protection Coordinator Track Supervisor must return the Track Warrant either:

- ***verbally by radio or phone*** by dictating the details in **Part 2** of the Track Warrant form to the Train Network Controller or Signaller that issued the Track Warrant, or
- ***in person*** by returning the Track Warrant form with **Part 2** completed to the Signaller who issued it.

Protection of Parallel Lines

Where a parallel line(s) passes the work site and the works will or could foul that line(s), the parallel line(s) must be protected by:

1. the issue of an **additional Track Warrant** for the line, or
2. implementing **Track Force Protection** in accordance with **Rule 3 or 4 (Section 15),** as applicable, of this Code of Practice, or
3. **Booking Out** the track in accordance with **Rule 22 (Section 15)** of this Code of Practice.

The Train Network Controller responsible for any parallel line(s) that pass the work site must be advised by the Network Controller or Signaller issuing the Track Warrant of any infrastructure work activities on the adjacent line, even if the line(s) passing the work site will not be fouled or obstructed.

b. Issue of a Track Warrant

The issue of a Track Warrant will be effected as follows:

- On the **Train Order**, Section Authority, Automatic Electric Staff and **Centralised Traffic Control** systems, the Train Network Controller is considered to be the Signaller and will be responsible for the issue of the Track Warrant.

Note:

Track Warrants are not used on the Phoenix Electronic Train Order System

- On the Electric Staff, **Train Staff and Ticket,** Track Block, **Automatic Block Signalling** and Automatic and Track Control systems, the Train Network Controller is considered to be the Signaller and will be responsible for the issue of the Track Warrant. Signaller may issue a Track Warrant, after conferring with and obtaining the permission of the Train Controller.

The Track Force Protection Coordinator Supervisor must:

- Request permission from the Train Network Controller or Signaller ***before*** commencing any work which will obstruct the line, stating the line section, location and distance in kilometres covered by the proposed work,
- Give the Train Network Controller or Signaller detailed advice of the likely duration of the proposed work,
- Advise the Train Network Controller or Signaller of an appropriate contact mode, should the need arise, (e.g. a mobile telephone number or radio channel and frequency details),
- Where Track Maintenance Machines/Vehicles are working in the area covered by the Track Warrant, advise the Train Network Controller or Signaller of the number of vehicles involved in the work area,
- Not allow the line to be fouled until the Train Network Controller or Signaller has given permission for the work either by transmitting the details in **Part 1** of the Track Warrant form by radio or phone, or by personally issuing the form with **Part 1** completed and the line is protected,

  When **Part 1** details have been received by radio or phone, the Track Supervisor must verify correct receipt by repeating them back to the Train Network Controller or Signaller,
- Ensure that the details of scheduled and running trains are entered in the Train Information and Permission Book (Form 2481) or equivalent record, showing the time that trains are due or expected at the applicable section(s) covered by the Track Warrant,

- Ensure protection STOP signs / red lights are placed on both sides of the work site and / or secure points to prevent entry to the work site,

  Note: If points can be secured with point clips and locks for a different route to prevent unauthorised rail traffic entry to the Track Warrant limits STOP signs / red lights are not required.

- Complete the work in time to clear the line and make it safe for rail traffic at least 20 minutes prior to the arrival of a train at either end of the affected section and advise the Train Network Controller or Signaller,
- Immediately advise the Train Network Controller or Signaller if the line is unable to be cleared at the time specified on the Track Warrant,
- At the completion of the work authorised by the Track Warrant, ensure that the line is clear and safe for the passage of rail traffic,
- Ensure all protection has been removed including point clips, and advise the Train Network Controller,
- Complete the details in **Part 2** of the form and transmit them to the Train Network Controller or Signaller, or return the completed form in person to the Signaller,
- If permission has been granted by the Track Supervisor for a Road Rail Vehicle to pass through the work area, the Track Supervisor must ensure the vehicle has cleared the work area prior to returning the Track Warrant,
- Report to the Train Network Controller or Signaller after the passage of each train, and if required, obtain a fresh Track Warrant to reoccupy the track,
- The Track Force Protection Coordinator Supervisor must conduct a Roll-by inspection of each passing train to ensure train integrity is maintained.

Where a Train Network Controller is responsible for Issuing the Track Warrant, the Train Network Controller must:

- Ensure that no train not yet in the section has been authorised to enter the section and that any train already within the section has passed the intended work site,
- Ensure that all relevant Train Running information is provided to the Track Force Protection Coordinator Supervisor,
- Graph the details on the Train Graph, ensuring no conflict exists ***prior*** to issuing or authorising the issue of the Track Warrant,
- In the **Centralised Traffic Control** system, apply a Blocking Facilities / Command over the Single Line section,
- In the **Automatic Block Signalling** system, apply Blocking Facilities to prevent unauthorised rail traffic entry to the portion of line,
- In **Train Order Territory** apply Blocking Facilities on the Train Graph to prevent unauthorised rail traffic entry to the portion of line,
- In the **Section Authority** system, apply a work gang permission "Under Absolute Occupation" with details of the Track Warrant and contact number of the Track Supervisor,
- Complete **Part 1** of a Track Warrant form, ensuring all the details are correct. Transmit the details by radio or phone to the Track Force Protection Coordinator Supervisor and record the correct read back of those details,
- Not authorise any train movement to enter the section until the Track Force Protection Coordinator Supervisor has returned the Track Warrant, and reported that the line is clear and safe for the passage of rail traffic and all protection has been removed,

  The Track Warrant is returned when the Track Force Protection Coordinator Supervisor has completed **Part 2** of the Track Warrant form and dictated the details to the Train Network Controller.

  Where necessary, another Track Warrant may be issued once the train has passed the work site.
- Give the Signaller(s) in attendance at one or both ends of the section(s) affected by the Track Warrant full details of the issue of the Track Warrant. This information must be endorsed by the Signaller(s) across the figure line of the Train Register Book,
- Where a Signaller is absent or not on duty at either end of the section at the time a Track Warrant is issued, the Signaller must be advised of the issue of

the Track Warrant upon commencing duty. When so advised, the Signaller must enter the appropriate details in the Train Register Book,

This is only to be carried out where the Track Force Protection Coordinator Supervisor has not already returned the Track Warrant.

- Should a Road Rail vehicle require to enter or pass the work area, the Train Network Controller must ensure that both the operator of the Road Rail vehicle and the Track Force Protection Coordinator Supervisor holding the Track Warrant have been advised of the working and movement of the other party,

  The Track Warrant must not be returned until the Track Force Protection Coordinator Supervisor has confirmed that the Road Rail vehicle is clear of the Track Warrant work area.

- Complete **Part 2** of the Track Warrant form as dictated by the Track Force Protection Coordinator Supervisor when the Track Force Protection Coordinator Supervisor reports that the work is complete and the track is clear and safe for rail traffic and all protection has been removed,
- Suitably endorse the Train Graph to reflect the return of the Track Warrant,
- Notify the Signaller(s) at one or both ends of the section of the return of the Track Warrant. The Signaller(s) must record this information across the figure line of the Train Register Book.

Where a Signaller is responsible for Issuing the Track Warrant, the Signaller must:

- Ensure that no train not yet in the section has been authorised to enter the section and that any train already within the section has passed the intended work site. The Train Register Book must be referenced in this instance,
- Ensure that all relevant Train Running information is provided to the Track Force Protection Coordinator, Supervisor
- Confer with the Train Network Controller and advise the period of time requested for the issue of the Track Warrant. Obtain authority from the Train Network Controller for the issue of the Track Warrant,

  Note: The Train Network Controller must record details of the authority on the Train Graph.

- Complete **Part 1** of a Track Warrant form, ensuring all the details are correct. Either transmit the details by radio or phone to the Track Force Protection Coordinator Supervisor and record the correct read back of those details, or obtain the Track Force Protection Coordinator's Supervisor's signature in the Train Register Book when issuing the Track Warrant form in person,

- Enter full details of the issue of the Track Warrant in the Train Register Book,
- On the Electric Staff or Train Staff and Ticket systems, issue the Track Supervisor with the Staff for the section and record the issue of the Staff in the Train Register Book (for more details, refer Clause (d) and (e) of this Rule),
- Where there is an opposing Signaller at the other end of the section, advise that Signaller of the issue of the Track Warrant and confirm that the Fixed Signals governing the entrance to the affected section are sleeved at the `Stop' position,

  When so advised, the opposing Signaller must include full details of the issue of the Track Warrant in the Train Register Book,
- Where the opposing Signaller at the other end of the section is absent or not on duty at the time a Track Warrant is issued, advise that Signaller of the issue of the Track Warrant, and confirm that the Fixed Signals governing the entrance to the affected section are sleeved at the `Stop' position as soon as that person commences duty,

  When so advised, the opposing Signaller must include full details of the issue of the Track Warrant in the Train Register Book.

  This is only to be carried out where the Track Force Protection Coordinator Supervisor has not already returned the Track Warrant,
- Not authorise any train movement to enter the section until the Track Force Protection Coordinator Supervisor has returned the Track Warrant and reported that the line is clear and safe for the passage of rail traffic and all protection has been removed,

  The Track Warrant is returned when the Track Force Protection Coordinator Supervisor has completed **Part 2** of the Track Warrant form and dictated the details to the Signaller or has handed the completed form back to the Signaller in person.

  Where necessary, another Track Warrant may be issued once the train has passed the work site.
- Should a Road Rail vehicle require to enter or pass the work area, the Signaller must ensure that both the operator of the Road Rail vehicle and the Track Force Protection Coordinator Supervisor holding the Track Warrant have been advised of the working and movement of the other party.

  The Track Warrant must not be returned until the Track Force Protection Coordinator Supervisor has confirmed that the Road Rail vehicle is clear of the Track Warrant work area,

- On the **Electric Staff** or **Train Staff and Ticket** systems, receive the Staff back from the Track Supervisor and obtain the Supervisor's signature in the Train Register Book (for more details, refer Clause **(d)** and **(e)** of this Rule),
- Advise the opposing Signaller at the other end of the section that the Track Warrant has been returned. The opposing Signaller must endorse the Train Register Book accordingly,
- Advise the Train Network Controller when the Track Warrant has been returned.

  Note: The Train Network Controller must record details of the return on the Train Graph.

c. Extent of Track Warrant Boundaries

With the exception of the **Section Authority** system, A Track Warrant may be issued for the entire single line section or part of the single line section, depending on the extent of the work area.

In the case of the Section Authority system, the Track Warrant shall apply over the entire Single Line or Track Section.

In granting permission for the issue of a Track Warrant, the following conditions must exist on the corridor:

(i.) Train Order Territory

Where a Track Warrant is issued for the entire single line section or an intermediate location, the permission to occupy the line will extend between the Up and Down Location Boards or Repeating Signals of the adjoining locations.

An approaching train may be permitted to approach the Crossing Station, Loop or Block Point at the boundary of the area where the Track Warrant is in force, provided the work point is at or beyond a point of 2500 metres from the Crossing Station, Loop or Block Point.

If the proposed boundary of the Track Warrant boundary is less than 2500 metres from the Crossing Station, Loop or Block Point, the adjoining section must also be included in the Track Warrant area.

Where a Track Warrant is issued for the Up or Down Track at an Unattended Crossing Loop, an approaching train is not permitted to be given permission to proceed beyond the adjoining Crossing Station, Loop or Block Point location.

Where there is a Signaller in attendance, the Fixed Signals governing entrance to the section must be secured at the `Stop' position until the Track Warrant is returned. The Train Register Book must be endorsed to this effect.

(ii.) Electric Staff, Automatic Electric Staff, Intermediate Electric Staff and Train Staff and Ticket Systems

Permission to occupy the line will extend over the entire single line section. Additionally, the Track Supervisor must be issued with the Electric Staff or Train Staff for the section. Where a Signaller is in attendance, the Fixed Signals governing entrance to the section must be secured at the `Stop' position until the Track Warrant is returned. The Train Register Book must be endorsed to this effect.

(iii.) Automatic and Track Control System

Permission to occupy the line will extend over the entire single line section between the Home Departure Signals of adjoining Crossing Stations/Loops. The Signallers at both ends of the section must ensure that the Fixed Signals governing entrance to the section are secured at the 'Stop' position until the Track Warrant is returned. The Train Register Books must be endorsed to this effect.

(iv.) Automatic Block Signalling System

On Double lines, permission to occupy the line will extend;

- from the Departure Signal at the Signalbox in the rear to the arriving Home Signal at the Signalbox in advance, or
- within a location between identifiable boundaries (these may include signals or points that can be used to protect the work site.

On Single lines, permission to occupy the line will extend between adjacent arriving Home Signals.

The Signaller / Train Network Controller must ensure that the Fixed Signals governing entrance to the section are secured at the 'Stop' position until the Tra*ck* Warrant is returned. The Train Register Book must be endorsed to this effect.

(v.) Section Authority System

A Track Warrant must be issued for the entire single line or track section.

Where a Track Warrant is issued between Crossing Loops and/or Block Points, the permission to occupy the line will extend up to the arriving Home Signal at that Crossing Loop or the Block Point boards at a Block Point location.

An approaching train may be permitted to approach the Crossing Station, Crossing Loop or Block Point at the boundary of the area where the Track Warrant is in force.

Where a Track Warrant is issued for the Main or Loop Track at an Unattended Crossing Loop or Remote Control Crossing Loop, an approaching train is not permitted to be given permission to proceed beyond the adjoining Crossing Station, Loop or Block Point location.

Prior to issuing a Track Warrant at an Unattended Crossing Loop, the Train Controller must ensure that appropriate Track Blocking commands (Blocking Facilities) have been applied over both the Main and Loop tracks at that location.

The Track Warrant shall only be applicable between the Up and Down end Clearance Point (CP) boards at that location.

Where there is a Signaller in attendance at an attended location, the Fixed Signals governing entrance to the section must be secured at the `Stop' position until advised by the Train Controller that the Track Warrant has been returned. The Train Register Book must be endorsed to this effect.

In the case of Remote Control locations, Blocking Commands (Blocking Facilities) must be applied on the applicable signals controlling entrance of trains into the affected section(s) and not removed until advised by the Train Controller that the Track Warrant has been returned, and the track is clear and safe for normal rail traffic and all protection has been removed.

Should a Track Warrant be issued on the Main or Loop Track of a Remote Control location within the Section Authority system, the Train Controller must apply Blocking Commands (Blocking Facilities) on the Arrival Signals at that location to protect the work operations. A Section Authority must not be issued for a movement to depart the Crossing Loop or Block Point either side of the Remote Control location until the Track Warrant is returned, and the track is certified as clear and safe for normal rail traffic and all protection has been removed.

(vi.)Centralised Traffic Control System

Permission to occupy the line will extend over the single line section between the Home Departure Signals at adjoining Crossing Loops or Junctions. The Train Network Controller must ensure that the Fixed Signals governing entrance to the section are secured at the `Stop' position by means of a Blocking Facilities / Command over the applicable section until the Track Warrant is returned and reported that the line is clear and safe for the passage of normal rail traffic and all protection has been removed.

Should the Track Warrant apply to either the Main or Loop Track at a Crossing Loop, the Train Network Controller must ensure that the appropriate Blocking Facilities / Commands have been applied to protect the line over which the Track Warrant applies.

The Drivers of any movements proceeding through the Crossing Loop must be advised of the issue of the Track Warrant.

Should a Switch In/Out Location be switched In, or an Attended Location is within the area where the Track Warrant applies, the Train Network Controller must instruct the Signaller at that location to secure the applicable Home Signals governing the entrance of trains into the area at the `Stop' position by means of Lever Sleeves. This advice must be given prior to the issue of the Track Warrant.

The Lever Sleeves must not be removed until advised by the Train Network Controller that the Track Warrant has been returned and the line is clear and safe for normal rail traffic and all protection has been removed.

d. Lines Worked Under Token Systems

The Signaller should give the Track Supervisor the Train Staff or Electric Staff for the section, after conferring with and obtaining agreement from the Train Controller that the time required can be granted without delaying a train.

Where an Electric Staff is not available due to Instrument failure, or a Train Staff has been lost, a Track Warrant may be issued whilst Train Authority Working is instituted, provided the section is clear and the authority of the Train Controller has been obtained.

Where the Train Staff is at the opposite end of the section when a Track Warrant is requested, the Train Staff must be transferred to the end of the section where the Track Warrant is required before the Track warrant is issued, provided train delays will not thereby be incurred.

Where the Train Staff or an Electric Staff is on a train proceeding away from the proposed Track Warrant work point, a Track Warrant must not be issued until the

Train Staff or Electric Staff has been returned or is available to be issued to the Track Supervisor, in conjunction with a Track Warrant.

It may be necessary for the Train Staff to be transferred to the opposite end of the section for this purpose.

e. Automatic Electric Staff System

On lines where the Automatic Electric Staff system is in force:

- At an **Attended Staff Station,** the Track Supervisor must obtain an Electric Staff from the Signaller.
- At an **Unattended Staff Station,** the Track Supervisor must obtain permission from the Train Controller to withdraw an Electric Staff.

This is provided that the Track Supervisor holds a current certificate of competency for operation of the Automatic Electric Staff system.

f. Locations Provided with Switching Facilities

If it is necessary to alter the status of a section in:

- Section Authority,
- Centralised Traffic Control, or
- Automatic and Track Control,
- Track Block, or
- Automatic Block Signalling

territory, and a Track Warrant has been issued for the section concerned, the status of the section must not be altered until arrangements have first been made for the Track Warrant to be returned. Once the status of the section has been altered, the Track Warrant may then be reissued indicating the new boundaries of the work point.

g. Attendance of Signalling Staff

Where a Signaller is in attendance, the Fixed Signals must be held at the `Stop' position for the protection of the section in which the Track Warrant has been issued. Where authorised by the National Rules Manager or delegate responsible Rail Safety Department, the Signaller may cease duty once a Track Warrant has been issued, provided no trains are scheduled to approach the location during the period the Track Warrant remains in force.

A Signaller must recommence duty either:

- ten minutes prior to the Track Warrant being returned, or
- on **Block Signalling** systems, be in attendance to give permission for a train to approach from the signalbox in the rear.

h. Corridors on Which Track Warrants are Authorised for Use

Except where the Phoenix Electronic Train Order System is in use, Track Warrants are authorised for use on all ARTC Corridors where this Code of Practice is applicable.

CORRIDOR	SAFEWORKING SYSTEM	TRACK
South Western Region		
North Geelong 'A' –	Track Block	Double
South Geelong —	Train Order Working	Single
Western Region		
Dimboola — Yaapeet	Train Order Working	Single
Murtoa — Hopetoun	Train Order Working	Single
Ararat — Maryborough	Train Staff and Ticket	Single
Gheringhap — Yelta	Train Order Working	Single
Ouyen — Panitya	Train Staff and Ticket	Single
Maryborough -	Train Staff and Ticket	Single
Deer Park West - Ballarat	Automatic and Track Control	Single
Dunolly — Korong Vale	Train Order Working	Single
Korong Vale — Kulwin	Train Order Working	Single
Korong Vale - Robinvale	Train Order Working	Single
Northern Region		
Bendigo — Piangil	Train Order Working	Single
Eaglehawk — Inglewood	Train Order Working	Single
Bendigo — Echuca	Train Order Working	Single
Echuca - Deniliquin	Train Order Working	Single
Barnes - Moulamein	Train Order Working	Single
North Eastern Region		
Albion — Jacana (Broad	Centralised Traffic Control	Single
Toolamba — Echuca	Train Order Working	Single
Seymour — Tocumwal	Train Order Working	Single
Shepparton — Dookie	Train Order Working	Single
Eastern Region		
Moe — Morwell	Automatic and Track Control	Single
Morwell — Traralgon	Electric Staff	Single
Traralgon — Bairnsdale	Train Staff and Ticket	Single
Central Region		
Sunshine - Brooklyn	Track Block	Single
Brooklyn – Newport (West	Track Block	Single
ARTC Standard Gauge Corridor		
McIntyre Loop - Albury	Centralised Traffic Control	Single
Newport - Gheringhap	Centralised Traffic Control	Single
Gheringhap – Maroona	Section Authority	Single
Maroona _ Dimboola Loop	Centralised Traffic Control	Single
Maroona – Portland	Train Order Working	Single
Benalla – Oaklands	Train Staff & Ticket	Single

22. 'Booking Out' Procedures for Track

a. Main Running Line

(i.) Main Running Line

If permission is obtained from the relevant Train Network Controller, a portion of Main Running Line may be `Booked Out' of service in the following instances:

- an emergency circumstance has arisen which necessitates the line being `Booked Out' of service for safety reasons; (i.e. natural obstruction which affects the stability of the line), or overhead disarranged) or
- Critical unplanned infrastructure works necessitate a section of line being `Booked Out' of service.

In all other instances, Absolute Occupation must be applied for in the usual manner in accordance with the provisions of Rule 8 (Section 15) of TA20.

Where a section of Main Running Line is to be `Booked Out' of service, the permission of the Train Network Controller and the authority of the Signaller (where a Signaller is in attendance) must be obtained.

(ii.) Details to be Submitted to the Train Network Controller

The following details must be given to the Train Network Controller by the Signaller or Infrastructure Representative:

- the section of track concerned, with the exact limits being defined (i.e. signal and points numbers),
- the form of protection which is to be employed, and
- the period of time which the Main Running Line or Siding will be unavailable for traffic.

b. Siding

(i.) Siding

A Siding at an Attended Station, Unattended Station or at an Intermediate location between Stations may be `Booked Out' of service in the following instances:

- track within the Siding is unfit for traffic purposes, or
- the Siding is to be used for the stabling of Track Maintenance Machines / Vehicles.

Prior to the Siding being `Booked Out' of service, the Infrastructure Representative Track Supervisor must obtain the authority of the controlling Signaller, or the Train Network Controller in the case of an Unattended Location. Where the Signaller receives the initial advice of the intent to `Book Out' a Siding, the Signaller must first obtain the permission of the Train Network Controller prior to authorising the `Booking Out'.

(ii.) Details to be Submitted to the Signaller / Train Network Controller

The Infrastructure Representative must give the following details to the Signaller / Train Network Controller when intending to `Book Out' a portion of Track. In the case of a Signaller, the details must be entered in the Train Register Book. The entry must be co-signed by the Infrastructure Representative. In the case of a Train Network Controller, the details are to be listed on the Train Graph together with the name of the Infrastructure Representative.

- The section of track concerned, with the exact limits being defined (i.e. using signal and points numbers),
- the form of protection which is to be employed. Points may only be utilised for protection where permission has first been obtained from the ARTC Train Transit Manager, and
- the period of time which the Main Running Line or Siding will be unavailable for traffic.

c. Protection

(i.) Protection of Main Running Line

Protection for a Main Running Line which is `Booked Out' of service must be effected through one of the following:

- Securing of points away from the track which is `Booked Out' of service. In this instance, permission must first be obtained from the Rail Safety / System Safety Department or in the case of the ARTC Operations Manager, or Network, the Safety Manager, or
- Provision of Hand Signallers in accordance with Rule 9 (Section 15). or
- Possession of the Electric or Train Staff for the section by the Track Force Protection Coordinator Supervisor.

(ii.) Protection of a Siding

Protection of a Siding which is `Booked Out' of service may be effected through:

- the securing of the points away from the Siding, provided permission is given by the ARTC Train Transit Manager, or
- via the provision of Hand Signallers in accordance with Rule 9 (Section 15) of TA20.

This protection must be applied prior to the Main Running Line or Siding being `Booked Out' of service.

Where the protection is maintained via the securing of points, the Signaller / Train Network Controller must ensure that the relevant signal levers are sleeved in the correct position or the appropriate point blocking command has been applied. A notation must be made in the Train Register Book or logbook indicating the numbers of the points affected and the position in which the points are secured. Additionally, Fixed Signals applicable to the `Booked Out' Track must be maintained at the `Stop' position.

d. Persons Qualified to `Book Out' Track

The `Booking Out' of service of Track is only permitted to be carried out by infrastructure personnel suitably qualified. in the Safeworking Co-ordinators duties (i.e: Level 3 of the Track Force Safeworking Practices Manual).

e. Locations Provided with Voice Recording Facilities

At locations which are provided with voice recording facilities, it will not be necessary for the Infrastructure Representative to report to the Train Network Control Centre or Signalbox when arranging the `Booking Out' of Track. The Infrastructure Representative must give the Signaller / Train Network Controller full details regarding the `Booking Out' via the telephone. Both the Infrastructure Representative and Signaller must exchange names for record purposes.

f. Track `Booked Out' of Service for Extended Period

Where a Main Line or Siding is `Booked Out' of service for an extended period of time (i.e: in excess of 24 hours), a Train Notice will be issued to authorise the process.

23. Infrastructure Booking Advice (IBA)

(RISSB Reference ANRP 3015 Version 2.0)

a. Purpose

To prescribe the rules for reporting and notifying changes to the ARTC Network for:

- the temporary or permanent installation or removal of infrastructure,
- booking infrastructure into or out of use

  and
- temporary bridging to release locking on signalling equipment.

NOTE:

Infrastructure Booking Advice is NOT to be used as a method of protection for Work on Track activities.

This Rule does not address the removal of overhead power supply.

ARTC does not have Overhead Power supply.

However, in the Melbourne Metropolitan area adjoining Access Providers do have Overhead Power supply, which may pass over or run parallel to the ARTC Network.

b. Advertising Infrastructure Work

Maintenance Representatives must make sure that work on infrastructure that affects the configuration of the Network is documented and *advertised*.

New infrastructure must be advertised before it is *certified* and *commissioned*.

c. Compiling Infrastructure Booking Advices

The Maintenance Representative must use an Infrastructure Booking Advice (IBA) form to detail work that requires infrastructure equipment to be:

- temporarily booked out of use,
- permanently removed,
- newly commissioned,
- booked back into use,

  or

- temporary bridging to release locking on signalling equipment.

Maintenance Representatives must compile the IBA form before equipment is removed or commissioned.

The Maintenance Representatives must:

- send a copy of the IBA form to the appropriate Network Controller,

  or

- jointly compile the IBA form with the Network Controller.

The Maintenance Representative must give a copy of the IBA form for work associated with an Absolute Occupation, Track Warrant or Track Force Protection to the Track Force Protection Coordinator in-charge of safe working.

The Network Controller and the Maintenance Representatives must keep completed IBA forms.

d. Securing Infrastructure

Infrastructure that is not yet commissioned, or has been decommissioned but not yet removed, must be *secured* against unauthorised use.

e. Certifying Infrastructure

Infrastructure that has been installed or removed must be certified in an IBA form:

- filled out by the relevant Maintenance Representatives,

  and

- acknowledged by the Network Controller.

f. Booking Infrastructure back into use

If infrastructure has been certified as working correctly, the relevant section of the IBA form must be signed.

The Maintenance Representative must give a copy of the completed IBA form for work associated with an Absolute Occupation, Track Warrant or Track Force Protection to the Track Force Protection Coordinator in-charge of safe working.

If parts of the infrastructure remain un-certifiable at the end of work, they must be booked out of use again in a new IBA form.

The new IBA form must:

- be compiled before the original authority is signed,

  and

- include a reference to the IBA it replaces.

The completed IBA form must include a reference to the new IBA form for those parts of the infrastructure that were not certified.

g. Using uncommissioned infrastructure

Infrastructure that is not yet commissioned (uncommissioned) may be given limited certification for specific purposes including *rail traffic* movements.

Before uncommissioned infrastructure is used:

- a Maintenance Representative must certify that it is fit for the specific purpose,

  and

- it must be advertised.

Uncommissioned infrastructure must be:

- unsecured before use,

  and

- secured after use.

h. Related References

Section 30 Operating Procedures Infrastructure Works Procedure 31 Using Infrastructure Booking Advices

24. Lookout Working

a. Purpose

To prescribe the rules for working on or near the track using Lookouts as the only safety method.

b. General

If a Safety Assessment shows that it is safe, some kinds of work may be done on or near the track without using Absolute Signal Blocking, Track Force Protection – Country Regions, a Track Warrant or an Absolute Occupation.

Lookout Working must not be used for work on the overhead wiring, work where the track is broken, work that breaks the track, or alters track geometry or structure.

(i.) Safety Assessment

If the Safety Assessment shows that a higher level of protection is necessary, work must not be done using Lookout Working.

If *Absolute Signal Blocking* is available this is the preferred method.

(ii.) Restrictions

Lookout Working must be only used where the visibility conditions allow clear sighting of rail traffic (terrain, fog, heavy rain or dust may restrict visibility.

Work in the Danger Zone using Lookout Working must only be done:

- in daylight hours only where the visibility conditions allow

  and

- for a maximum of two (2) hours.

If it is necessary for work under Lookout Working to continue beyond two (2) hours, the Track Force Protection Coordinator must tell the Network Controller that the work is to continue.

(iii.)Tools

Workers using Lookout Working may only use:

- light non-powered hand tools

  or

- *light battery powered tools* or devices.

The tool or device must not interfere with the ability of the worker to respond to a Lookout's warning.

c. Safety Measures

Lookouts are the only safety measure used in this method of working on or near the track.

Where an authorised device is provided for the purpose of giving warning it will not be necessary to employ Lookout's.

(i.) Safe Places

An easily reached *Safe Place* must be available if Lookout Working is used.

Workers must be able to remove themselves, tools and materials to a Safe Place immediately when told to do so by a Lookout.

Workers must be in a safe place, at least 10 seconds before rail traffic arrives, and remain clear until rail traffic has passed.

d. Track Force Protection Coordinator

There must be a Track Force *Protection Coordinator* for the period of the work.

A Track Force Protection Coordinator's primary duty is to keep the worksite and workers safe.

A Track Force Protection Coordinator's is responsible for managing the rail safety component of worksite protection.

A Track Force Protection Coordinator's must be satisfied that other work will not interfere with protection duties.

A Track Force Protection Coordinator must:

- tell workers about the locations of Safe Places,
- determine the number of Lookouts needed to protect the work,

  and
- be the only person to speak to Network Controllers about safety arrangements.

(i.) Placing Lookouts

The Track Force Protection Coordinator must make sure that:

- the locations of Lookouts and the visibility conditions give Lookouts enough sighting distance, to give a timely warning of approaching *rail traffic,*

  and
- when rail traffic approaches, Lookouts can warn workers in time to allow them to:
  - react to the warning of the approach of rail traffic

    and
  - move themselves and their equipment to a safe place before the rail traffic arrives.

To give sufficient warning time, an additional Lookout may be used.

Only one additional Lookout may be placed in each direction from which rail traffic may approach.

The additional Lookout must remain within sight and hearing distance of the Lookout closest to the worksite.

The Track Force Protection Coordinator must:

- reassess safety measures if conditions such as visibility or worksite locations change

  and
- make sure Lookouts do not work continuously at the same location for more than 60 minutes.

NOTE **The Track Force Protection Coordinator may be the Lookout at the worksite.**

e. Lookouts

A Lookout must not use radios or telephones to warn workers of the approach of rail traffic.

Lookouts must be alert for rail traffic which is unexpected or comes from the wrong-running direction.

Lookouts must:

- keep watch for rail traffic approaching the worksite from any direction

  and

- warn workers immediately if rail traffic approaches the worksite.

Lookouts must not:

- manage the passage of rail traffic

  or

- do any other work.

f. Communications with Network Controller

Work on or near the track must not begin until the Track Force Protection Coordinator has spoken with the Network Controller about the use of Lookout Working.

The Track Force Protection Coordinator must tell the Network Controller:

- their name and contact details,
- the location of the work,
- the type of work to be done,

  and

- the intended start and finish times.

The Track Force Protection Coordinator must also get information about rail traffic movements likely to occur at the work location from the Network Controller.

Information about rail traffic movements likely to occur is provided only as a guide and is not to be relied upon as the only safety measure.

g. Keeping Records

The Track Force Protection Coordinator must keep a *permanent record* of:

- Lookout Working for worksites,

  and

- communications with the Network Controller about Lookout Working.

The Network Controller must record the details of the use of Lookout Working on the train control graph.

h. Ending Lookout Working

The Track Force Protection Coordinator must tell the Network Controller when the workers and their equipment are clear of the track and work is completed.

i. Related References

Section 30 Operating Procedures Infrastructure Works Procedure 33 Using Lookouts.

25. Absolute Signal Blocking

a. Purpose

To prescribe the rules for working on or near the track using *Absolute Signal Blocking*, to exclude *rail traffic* from a portion of *track*.

b. General

(i.) Safety Assessment

If the Safety Assessment shows that Track Force Protection – Country Regions, a Track Warrant or an Absolute Occupation is necessary, work must not be done using the Absolute Signal Blocking.

If a Safety Assessment shows that it is safe, some kinds of work may be done on or near the track without using Track Force Protection – Country Regions, a Track Warrant or an Absolute Occupation.

The Absolute Signal Blocking method of protection may be used.

(ii.) Working under Absolute Signal Blocking

When working using Absolute Signal Blocking, one worker may work alone, and in this case, that worker is the *Track Force Protection Coordinator*.

c. Using Absolute Signal Blocking

Absolute Signal Blocking may be used only:

- for work not requiring tools
- for work using *light non-powered, light powered hand tools* and *light battery powered tools or devices* which can be easily and immediately removed from the track by one person without mechanical assistance,

  or
- to allow vehicles and machines to directly cross the track.

(i.) Restrictions

The Absolute Signal Blocking method must be applied to *Controlled Absolute Signals* only.

Absolute Signal Blocking must not be used:

- where the track is already broken
- for work that:
  - breaks the track,

    or
  - alters track geometry or structure,

  or
- where Track Force Protection – Country Regions, a Track Warrant, an Absolute Occupation or a Road Rail vehicle permission is in place.

d. Requesting Absolute Signal Blocking

When using Absolute Signal Blocking method for work on track, the Track Force Protection Coordinator must:

- speak to the Network Controller,
- tell the Network Controller the location of the worksite,
- tell the Network Controller the intended start and finish times,
- request permission for Absolute Signal Blocking,

  and
- identify the signals to be set and kept at STOP and blocking facilities / blocking commands applied.

WARNING **The Network Controller must not permit the use of Absolute Signal Blocking, if in any doubt about the location of the proposed worksite.**

e. Permission for Absolute Signal Blocking

(i.) Area of Control

Network Controllers may only authorise Absolute Signal Blocking for signals in their area of control.

If the Absolute Signal Blocking requires more than one Network Controller to exclude rail traffic from a portion of track, the affected Network Controllers must:

- confer to ensure all points of entry are protected,

  and

- nominate an authorising Network Controller.

f. Protection Methods

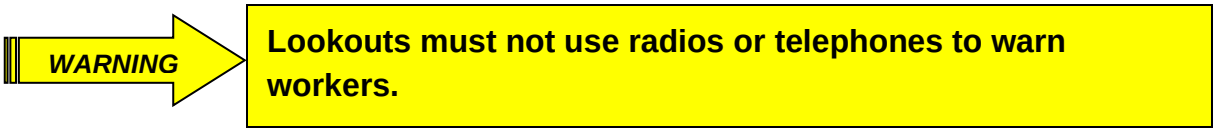

(i.) Protecting Work

The Track Force Protection Coordinator must arrange for:

- Controlled Absolute Signals to be set at STOP with blocking facilities / blocking commands applied,
- manual points control mechanism to be used to set Controlled Absolute Signals at STOP,

  or

- points secured to prevent access.

If rail traffic can approach from more than one direction, the Track Force Protection Coordinator must protect all points of entry into the Absolute Signal Blocking limits.

(ii.) Network Controller

Before clearing a protecting signal for a different route, the Track Force Protection Coordinator and Network Controller must ensure that the worksite is not established at a location where rail traffic using the different route can enter the worksite.

Before allowing the work to start, the Network Controller must make sure that:

- the Protecting Controlled Absolute Signals have been set at STOP with blocking facilities / blocking commands applied,
- there is no approaching rail traffic between the protecting Controlled Absolute Signals and the proposed worksite,

  and
- any rail traffic that has passed complete beyond the proposed worksite will not be authorised to return.

g. Track Force Protection Coordinator

A Track Force Protection Coordinator is required for the period of the work.

(i.) Confirming Protection is Applied

Before work starts, the Track Force Protection Coordinator must confirm with the Network Controller that:

- the protecting Controlled Absolute Signals have been set at STOP with blocking facilities / blocking commands applied,
- the track is clear between the protecting Controlled Absolute Signals and the proposed worksite,

  and
- any rail traffic that has passed complete beyond the worksite, will not return.

(ii.) Primary Duty

A Track Force Protection Coordinator's primary duty is to keep the worksite and workers safe.

A Track Force Protection Coordinator is responsible for managing the rail safety component of worksite protection and must:

- tell workers about the locations of Safe Places, and the kinds and limits of safety measures in place:
  - before work begins,

    and
  - if the protection arrangements change,
- be the only person to speak to Network Controllers about safety arrangements,

  and
- make sure that the agreed safety measures are in place before work starts.

(iii.) Other duties

A Track Force Protection Coordinator must be satisfied that other work will not interfere with *protection* duties.

h. Ending Absolute Signal Blocking

(i.) Track Force Protection Coordinator

The Track Force Protection Coordinator must tell the Network Controller when:

- work is completed,
- workers and their equipment are clear of the track,
- if used:
  - manual points mechanisms have been returned to normal,

    and
  - points that were secured are available for use.

(ii.) Network Controller

After being told by the Track Force Protection Coordinator that the track is clear, the Network Controller may remove blocking facilities applied for Absolute Signal Blocking.

i. Keeping Records

Network Controllers and the Track Force Protection Coordinator must keep a *permanent record* about the Absolute Signal Blocking details.

The Network Controller records details of the Absolute Signal Blocking on the train control graph.

j. Related References

Section 30 Operating Procedures Infrastructure Works Procedure 34 Using Absolute Signal Blocking